4 + 3 Drawer Chest

Assembly Instructions

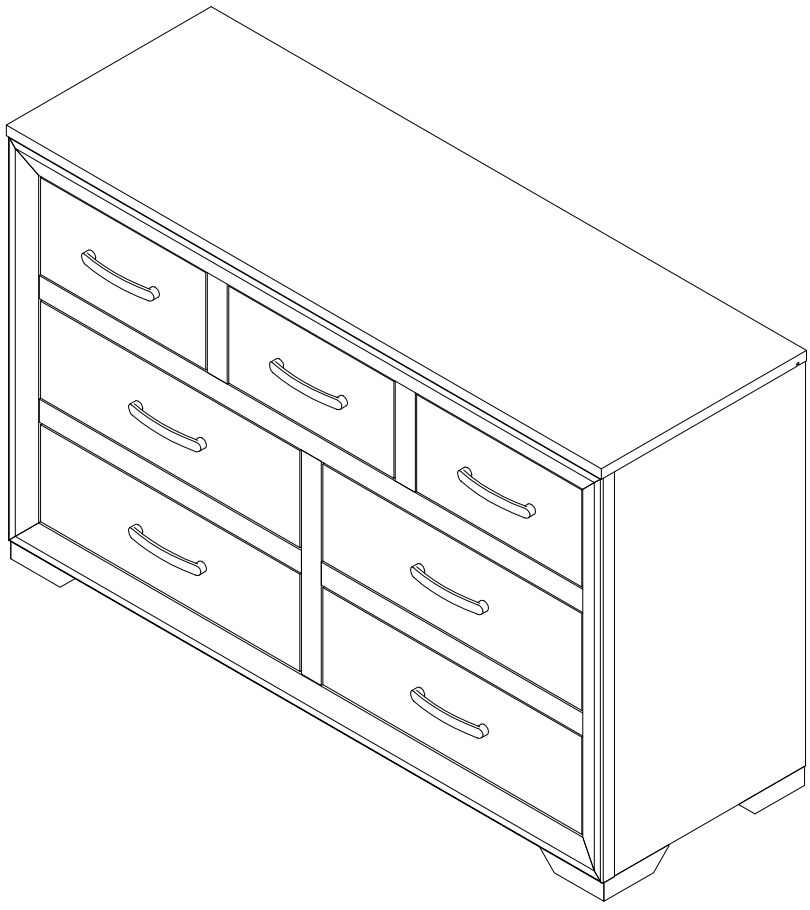

VERSION 171128

BUC003

CA5271J0213J00-01

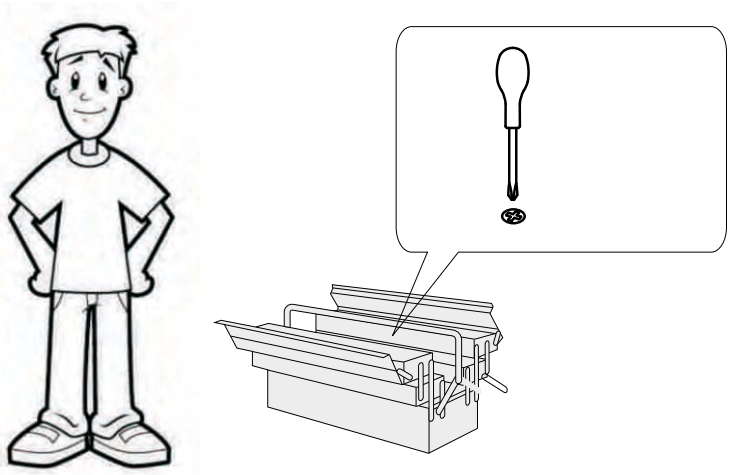

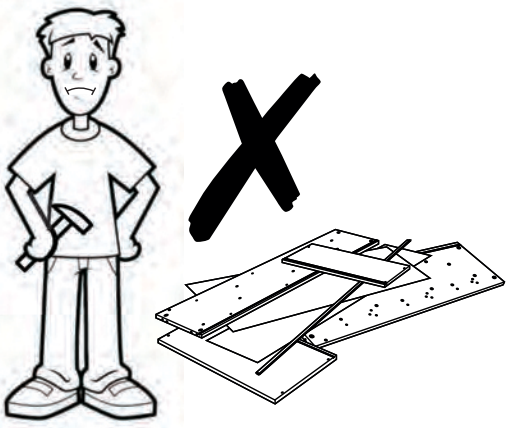

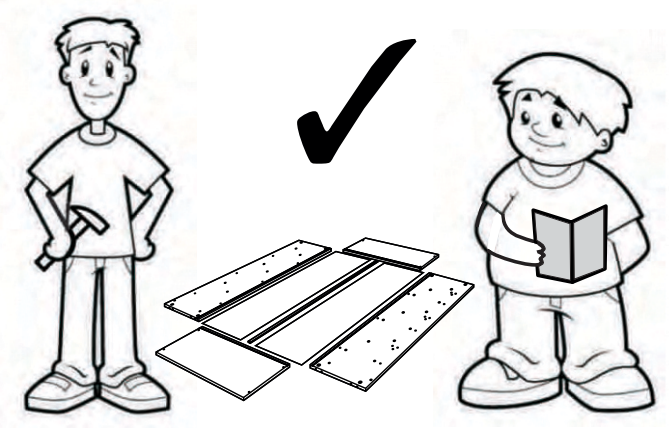

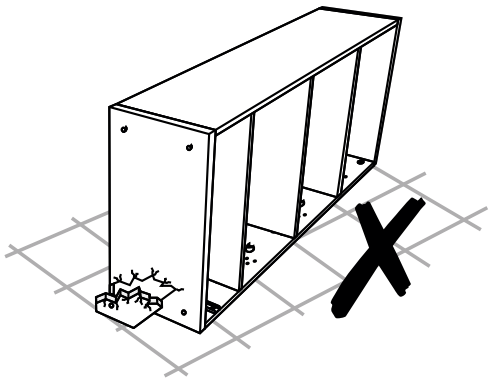

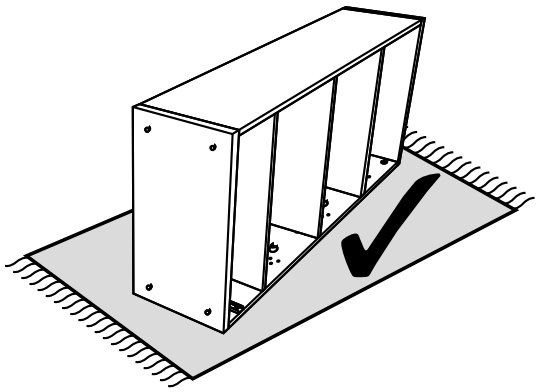

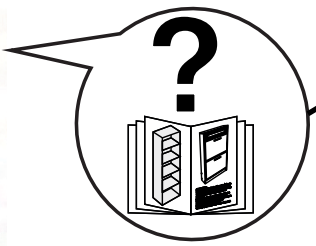

Customer Service
(01623 727374)

HARDWARE

A

M3.5 X 12MM

28x

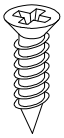

B

M3.5 X 15MM

70x

C

M6 X 9MM

16x

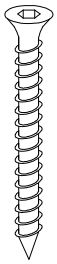

D

M6 X 40MM

50x

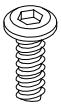

E

M6 X 12MM

2x

F

Ø6 X L13MM

2x

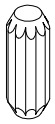

G

Ø6 X 20MM

30x

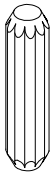

H

Ø6 X 35MM

24x

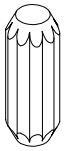

J

Ø8 X 25MM

53x

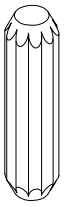

K

Ø8 X 35MM

8x

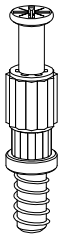

L

20 X 5MM

48x

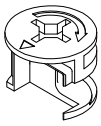

M

15 X 15

34x

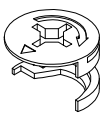

N

15 X 12

14x

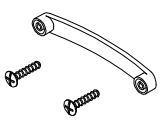

P

MC4 X 22MM

7x

HARDWARE

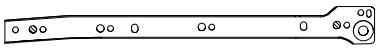

Q1

350MM

7x

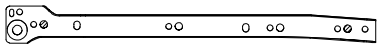

Q2

350MM

7x

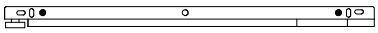

R1

350MM

7x

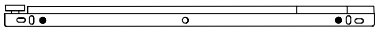

R2

350MM

7x

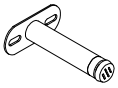

S

Ø25 X 67MM

1x

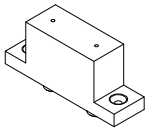

T

H35MM X L80MM

12x

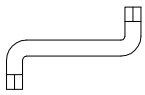

U

M4

1x

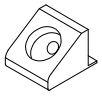

V

32x

W

1.2 X 12 X 145MM

2x

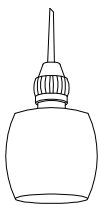

X

8x

PARTS

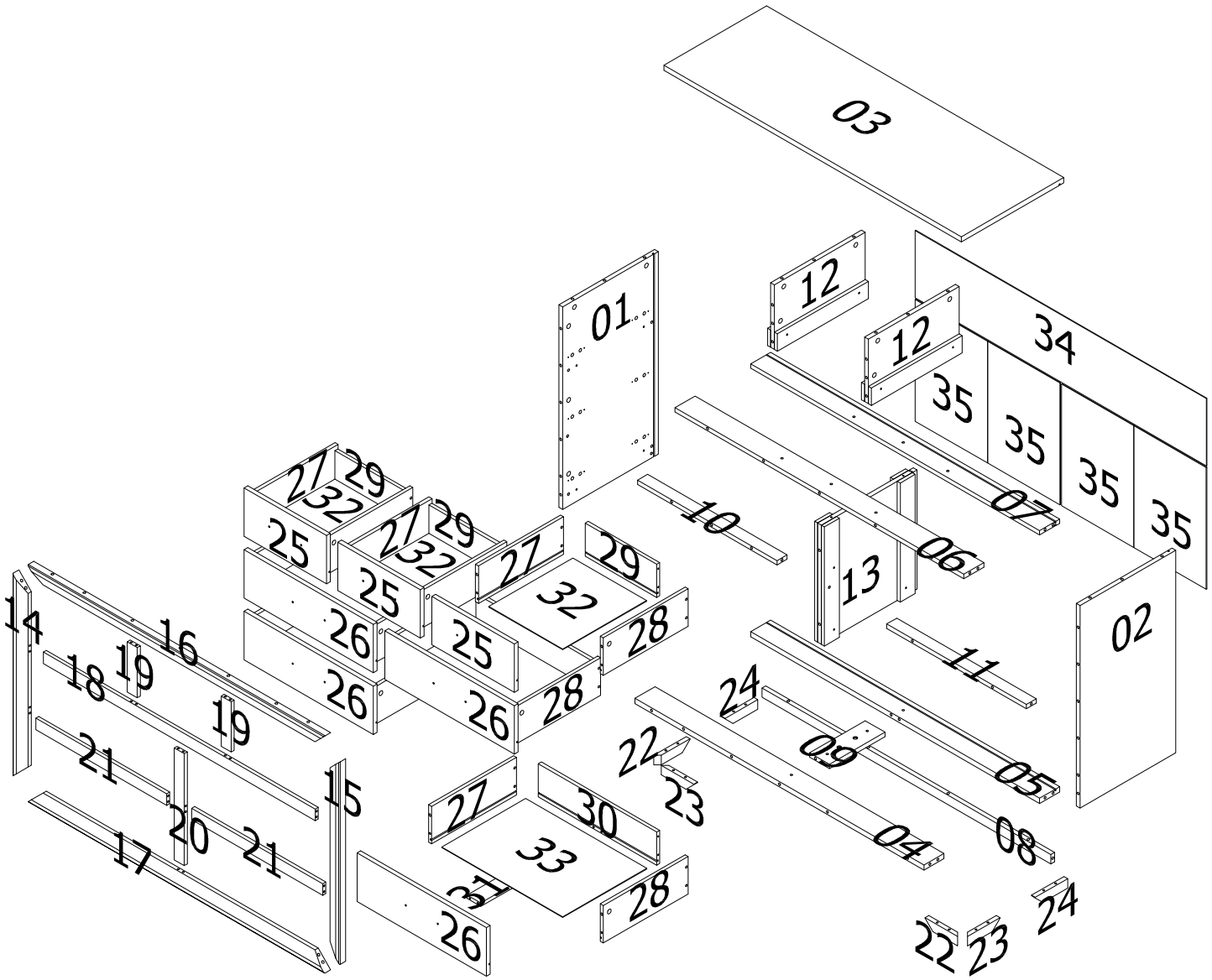
03
01
12
12
34
35
35
35
35
07
10
06
13
02
11
05
09
24
22
23
04
08
24
22
23
27
29
32
25
26
28
14
16
18
19
19
21
15
20
21
17
30
33
31

Safety Advice

Please take the time to carefully read through the whole of these instructions before you commence.
Keep these instructions for future reference.
Unpack, inspect and check off all of the contents.
Please dispose of all packaging safely.
Small component parts could choke a child if swallowed.
We strongly recommend that you keep children well away from the work area.
It would be sensible to lay a sheet or blanket on the floor where you intend to work to avoid scratching this product and to protect your floor.
This product is heavy. Take extreme care when lifting to avoid personal injury or damage to the product.
Assemble the product as close to its intended final position in the room as possible.

HANDY HINT : If you keep the hardware in a bowl during assembly you will be less likely to lose them.

Please allow 4 hours for 2 people to assemble this product.

We strongly urge that you do not use Power Tools, such as drills or electric screwdrivers during this assembly as this could cause irreparable damage to your product and will invalidate the warranty.

“WARNING: In order to prevent overturning this product must be used with the wall attachment device provided.”

1

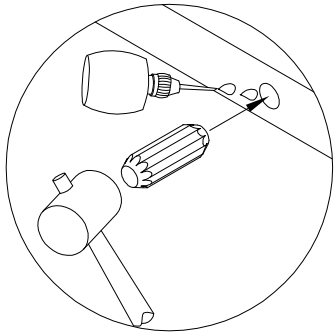

01

J

27=7PCS

G

28=7PCS

G

31=4PCS

G

02

J

18

H

19=2PCS

H

04

J

20

H

06

J

05

J

21=2PCS

H

H

G X30

H X24

J X21

X

2

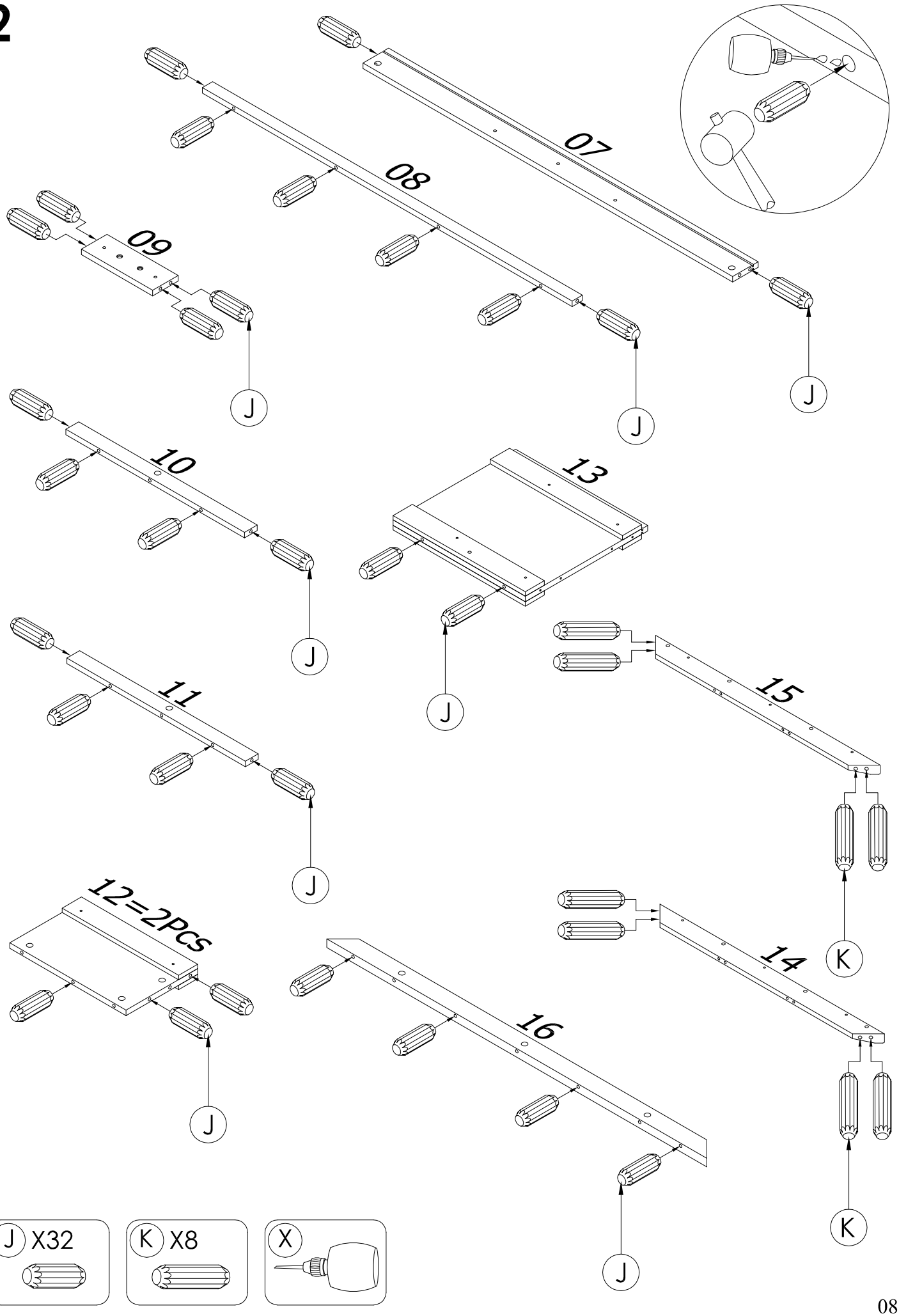

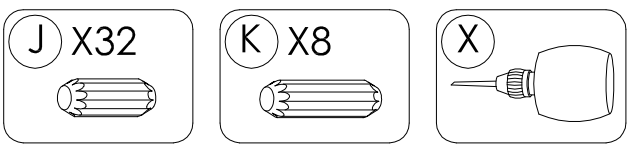

3

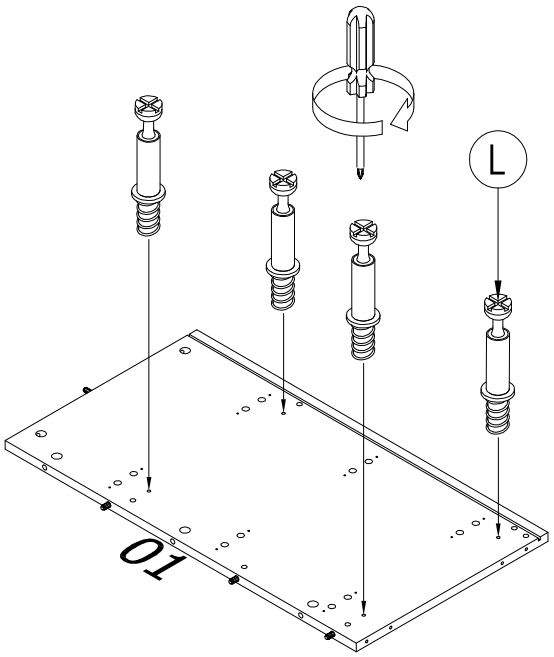

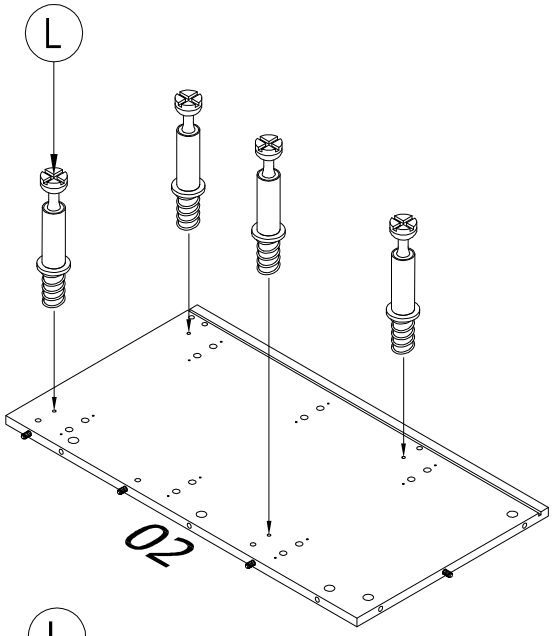

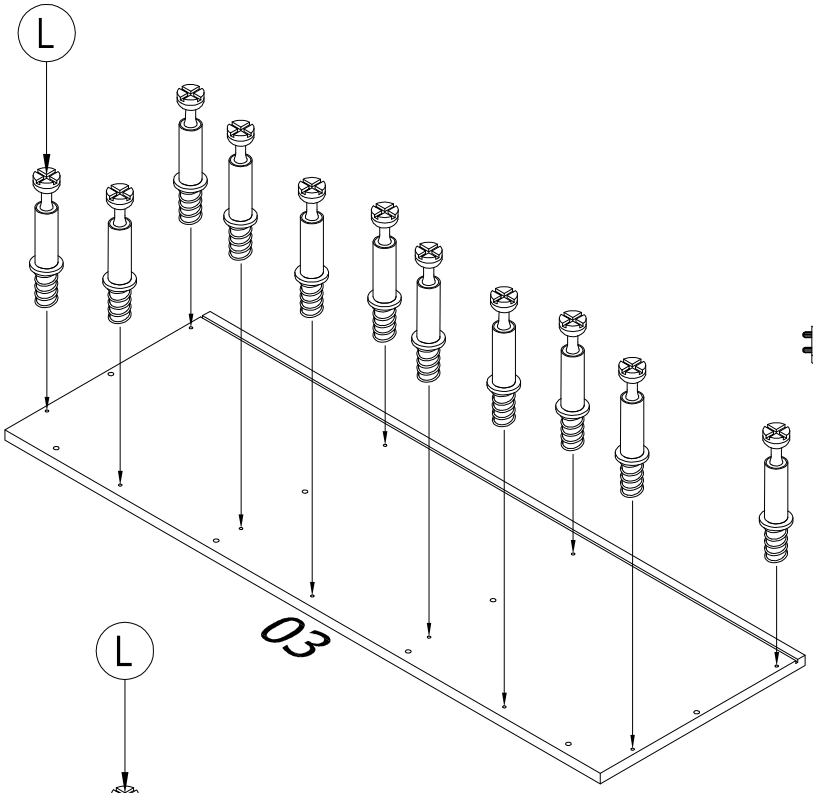

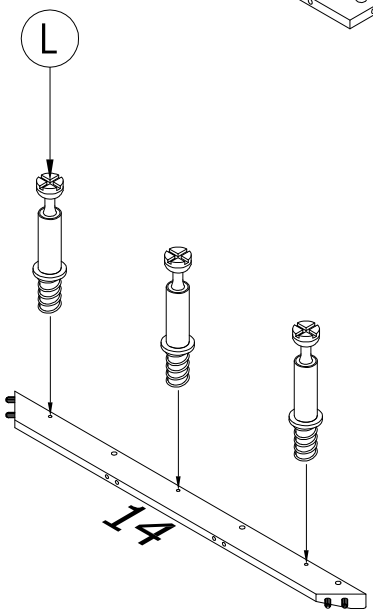

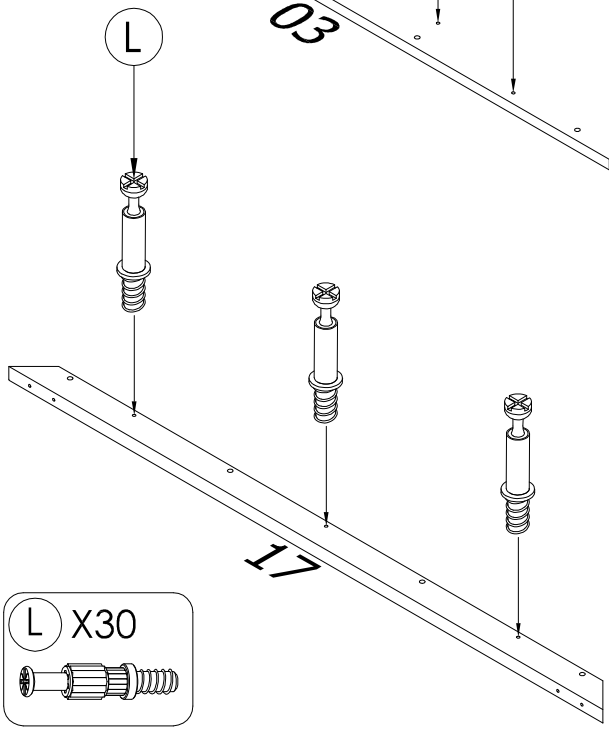

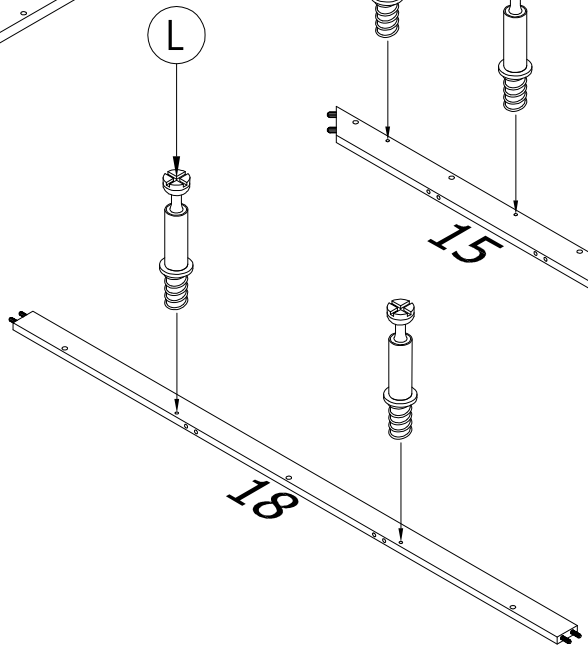

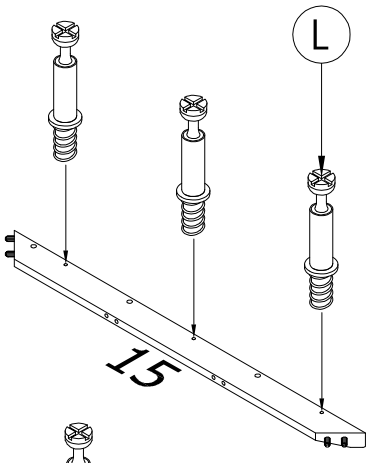

4

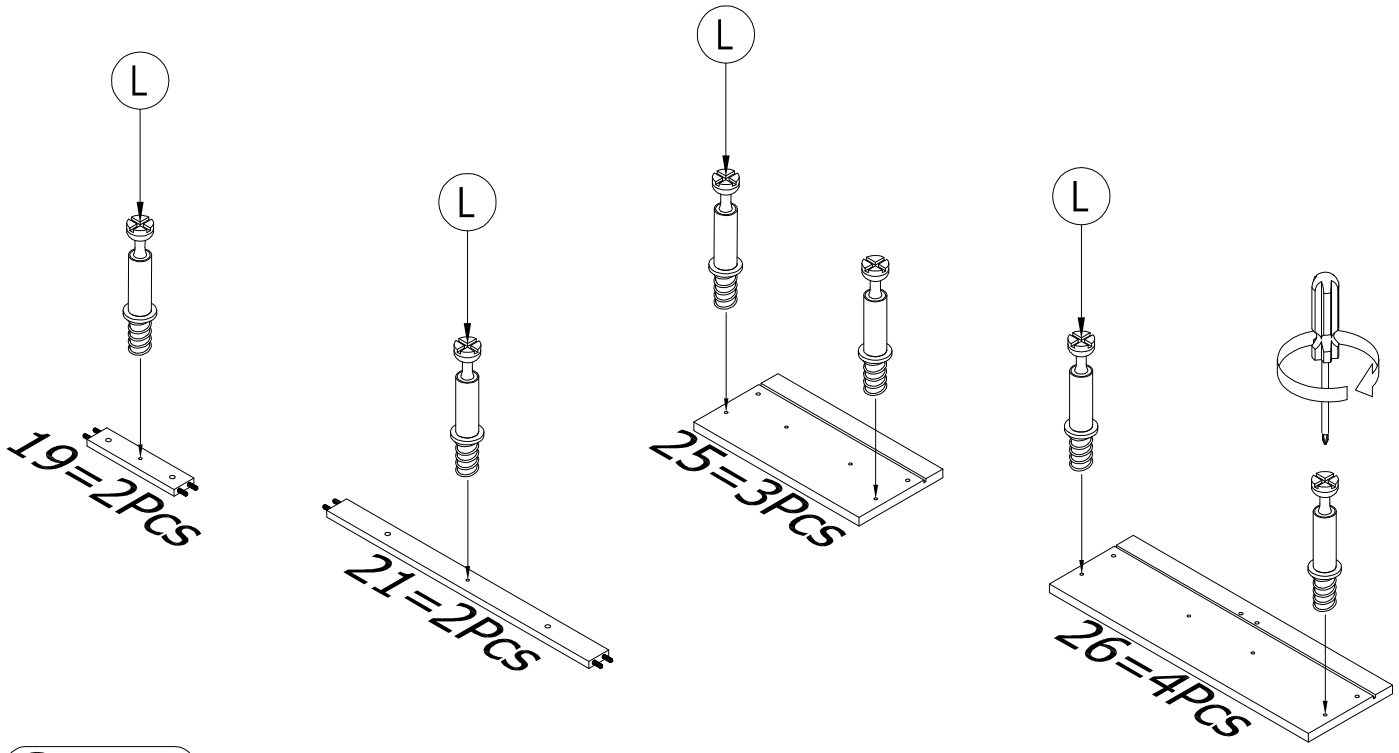

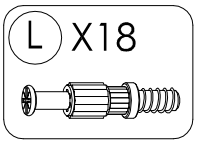

5

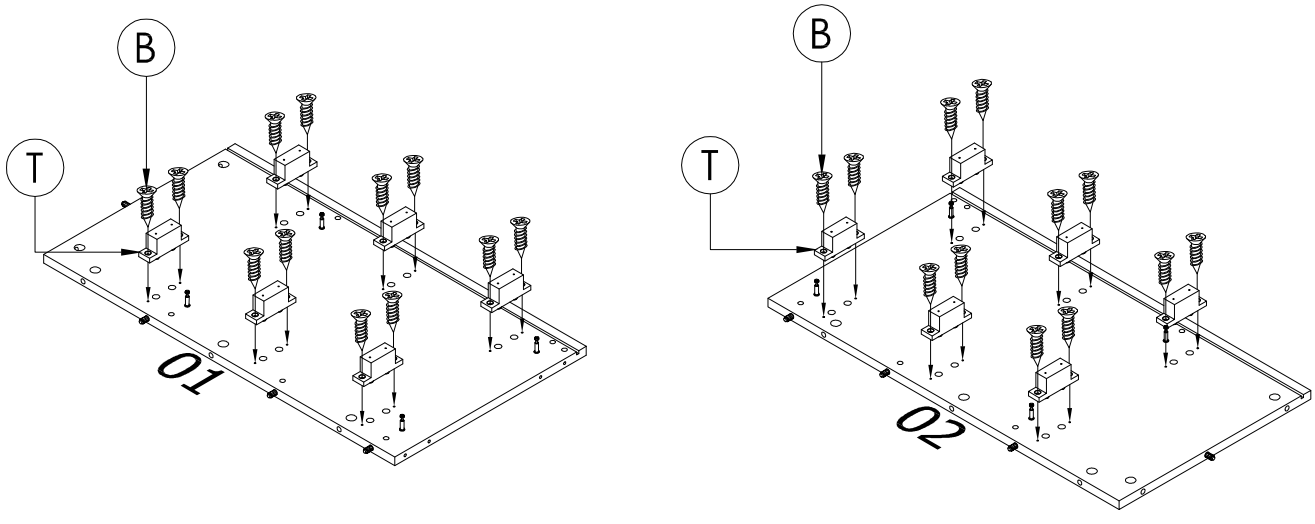

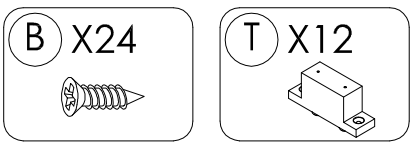

6

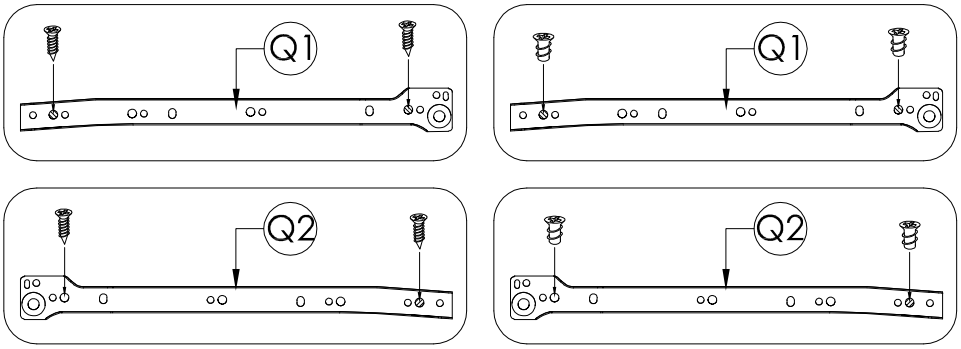
Q1
Q1
Q2
Q2

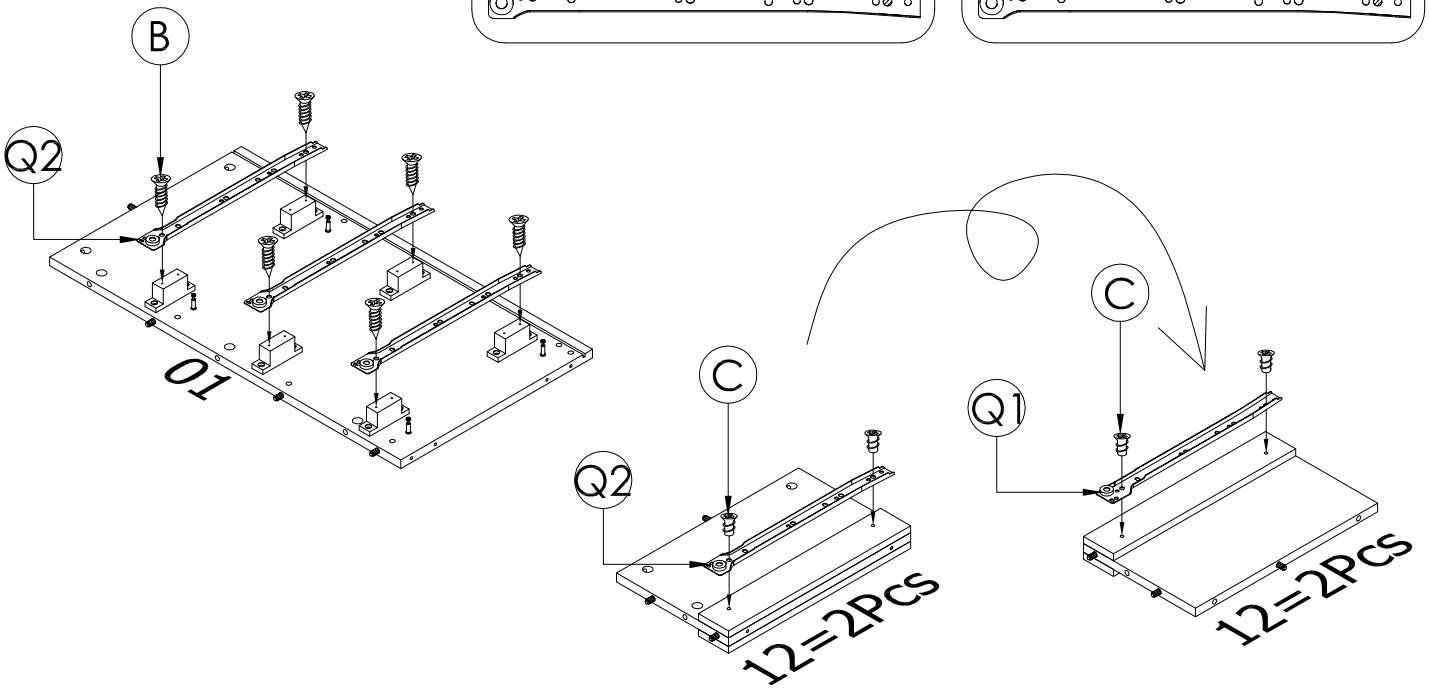
B
Q2
01
C
Q2
12=2Pcs
C
Q1
12=2Pcs

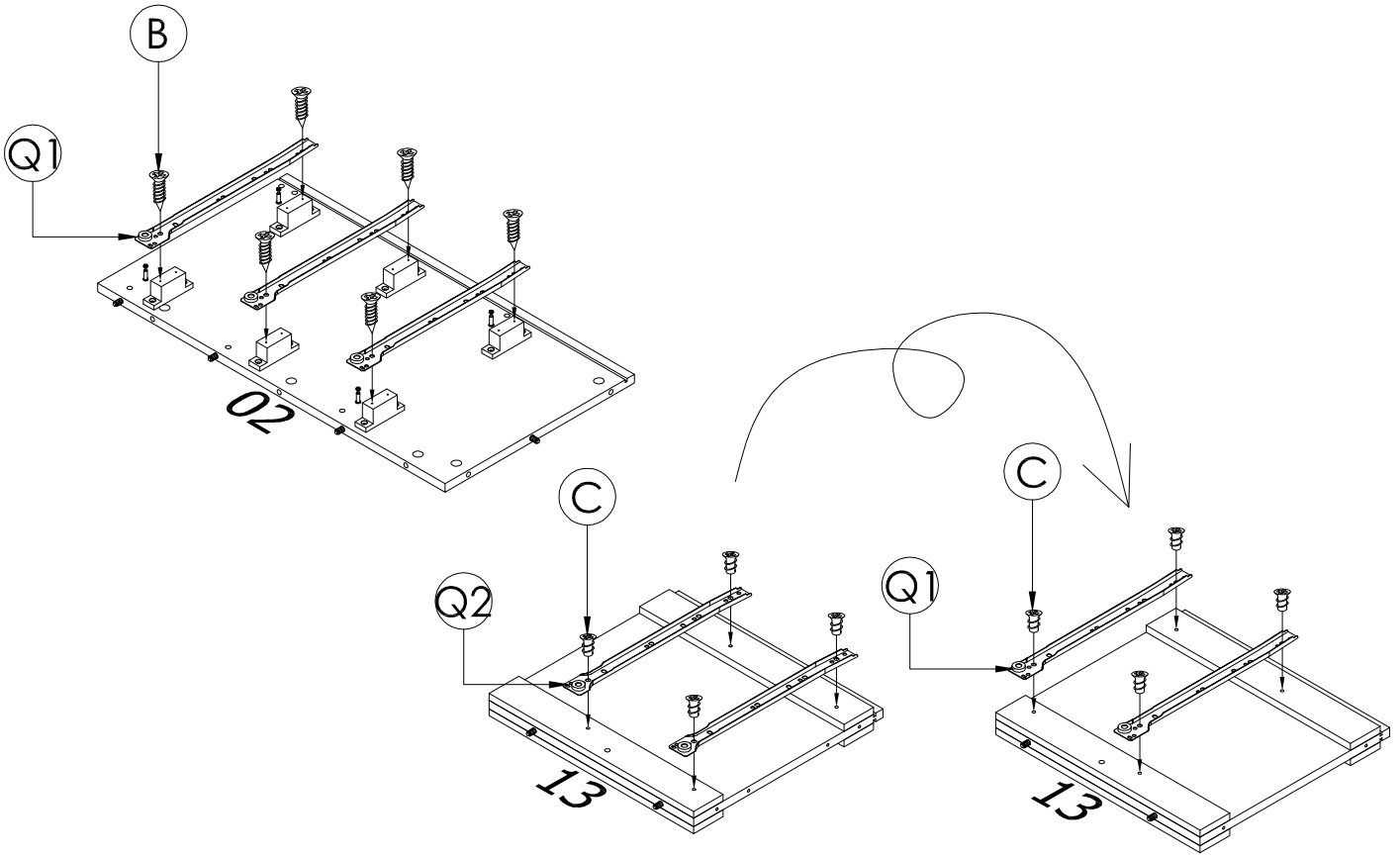
B
Q1
02
C
Q2
13
C
Q1
13

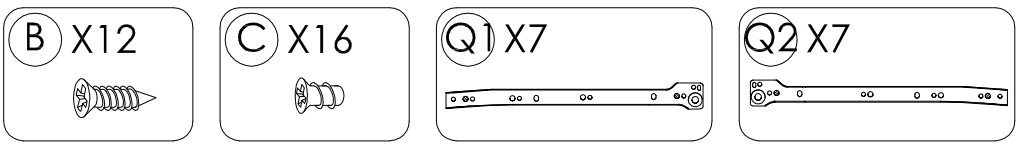
B X12
C X16
Q1 X7
Q2 X7

7

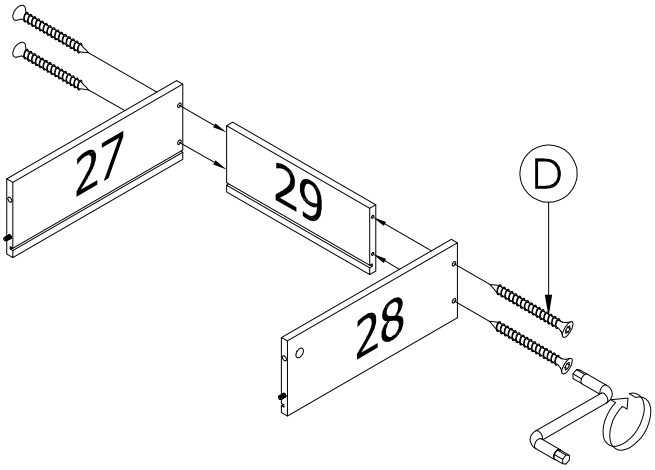
27
29
28
D

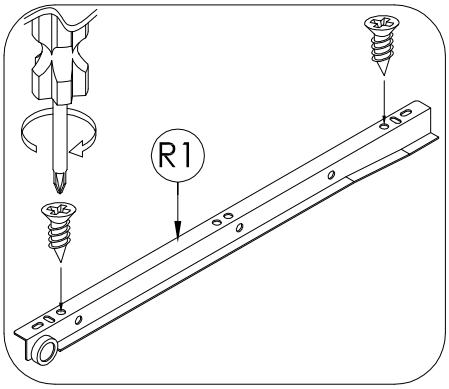
R1

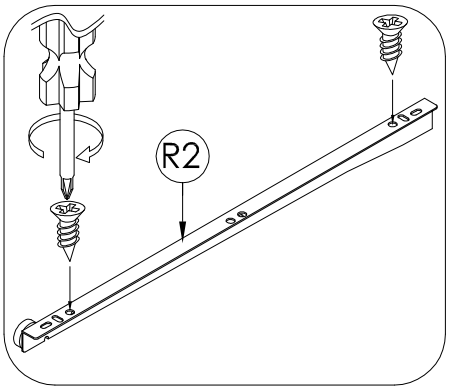
R2

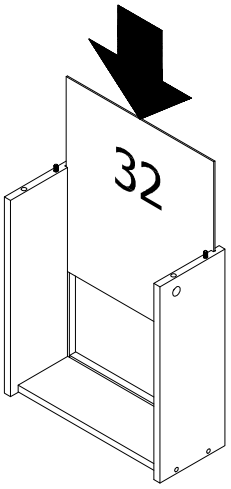
32

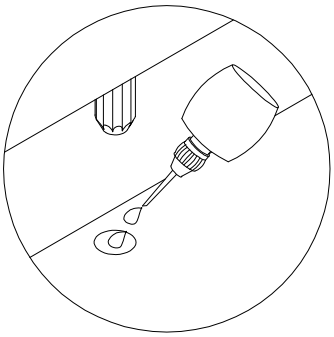

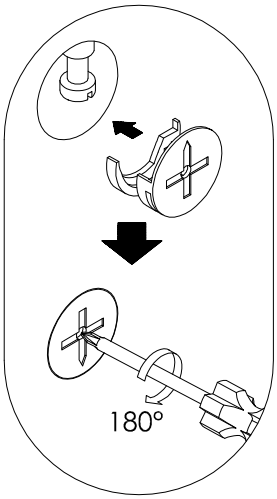
180°

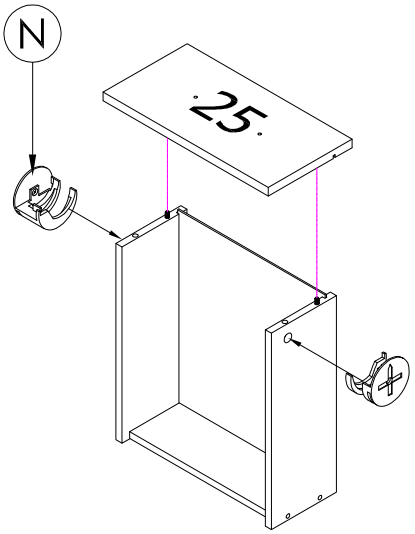
N
25

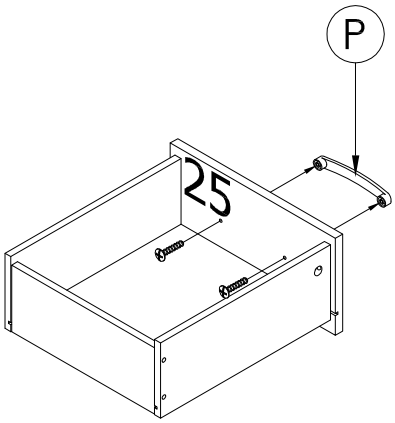
P
25

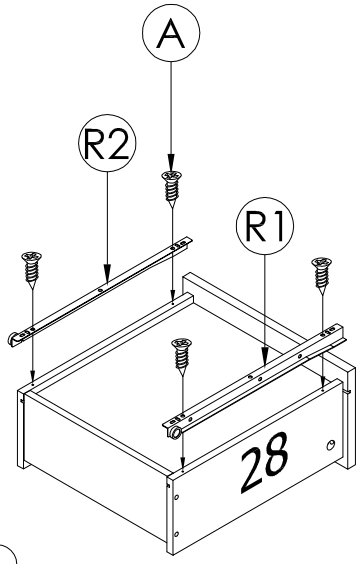
A
R2
R1
28

X3

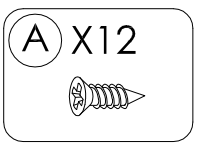
A X12

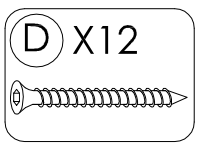
D X12

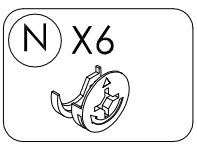
N X6

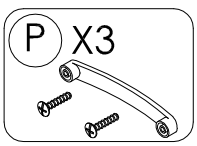
P X3

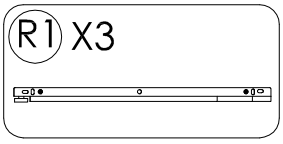
R1 X3

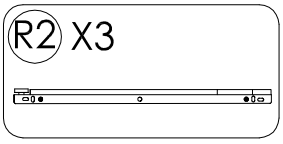
R2 X3

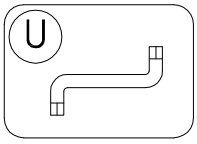
U

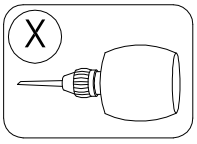
X

8

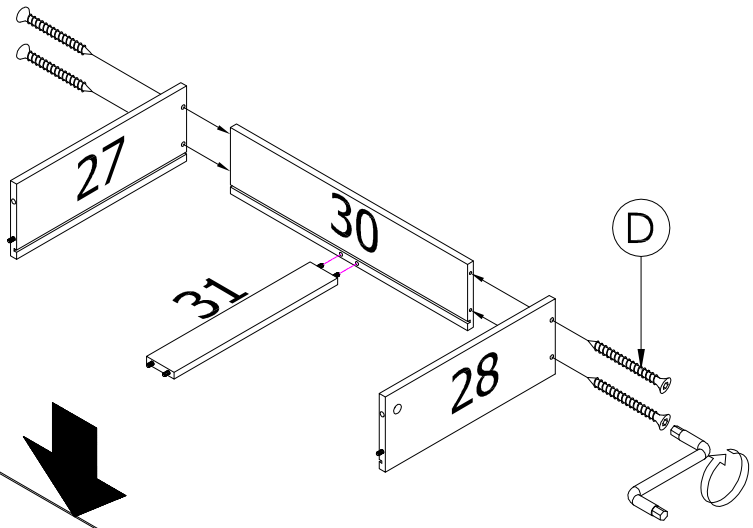

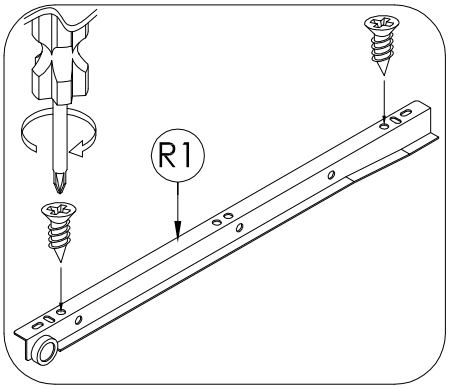

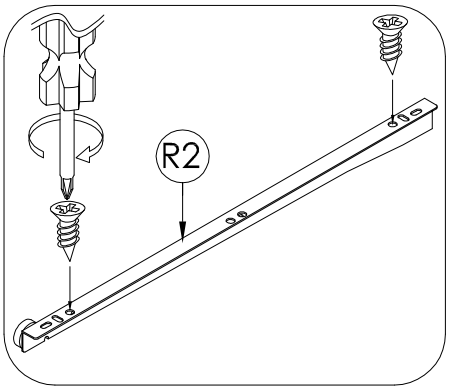

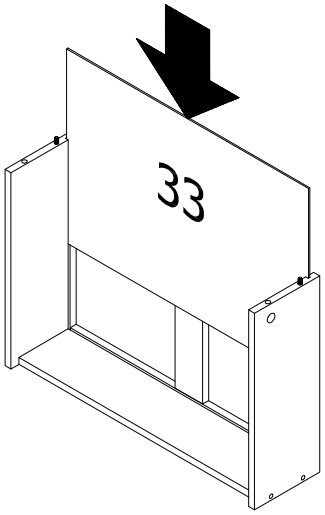

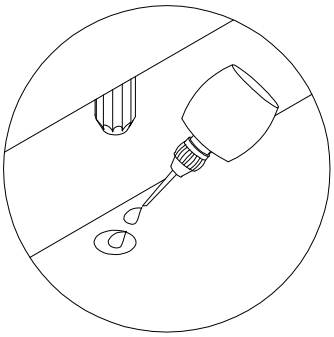

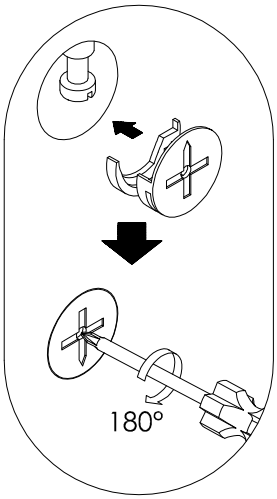

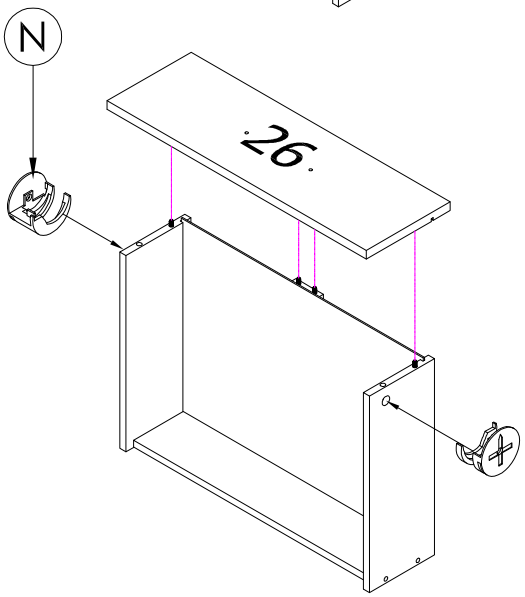

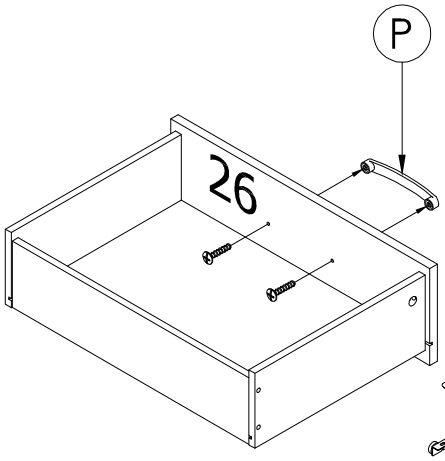

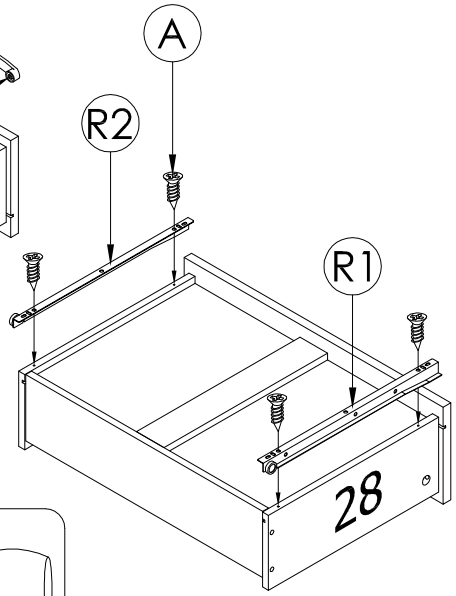

X4

A X16	D X16	N X8	P X4
R1 X4	R2 X4	U	X

9

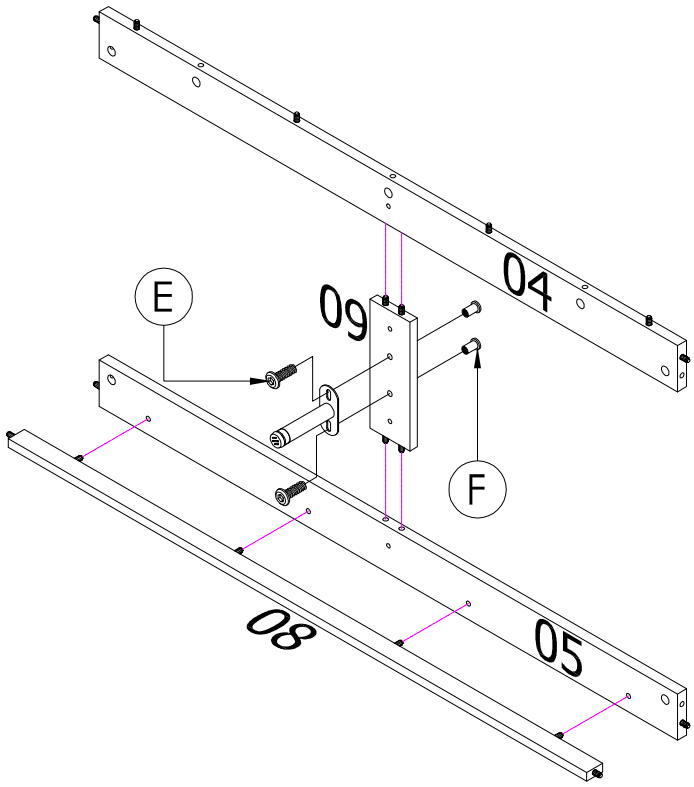

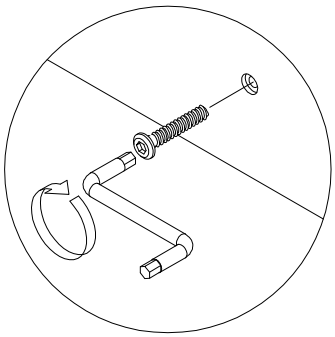

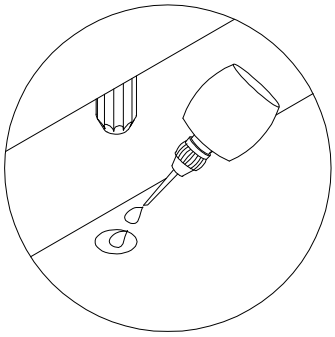

E X2

F X2

U

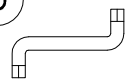

X

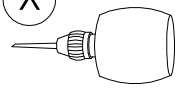

10

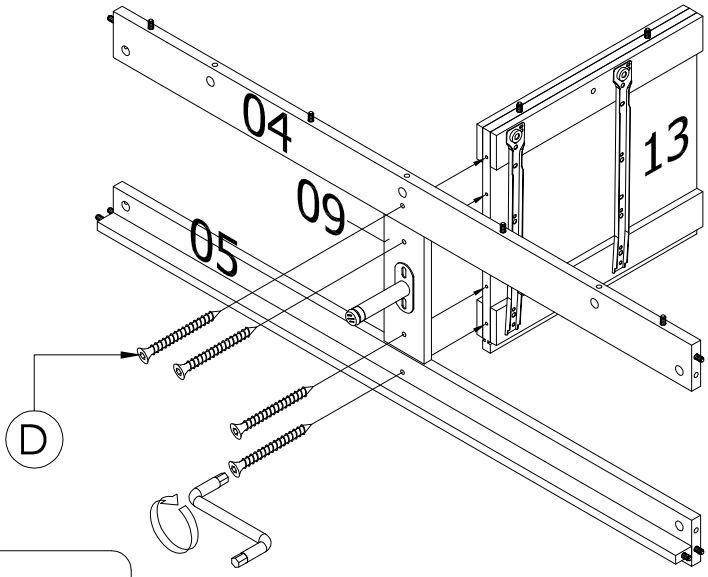

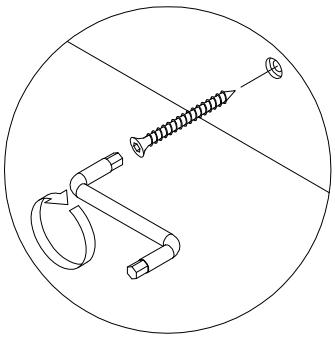

D X4

U

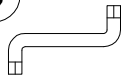

11

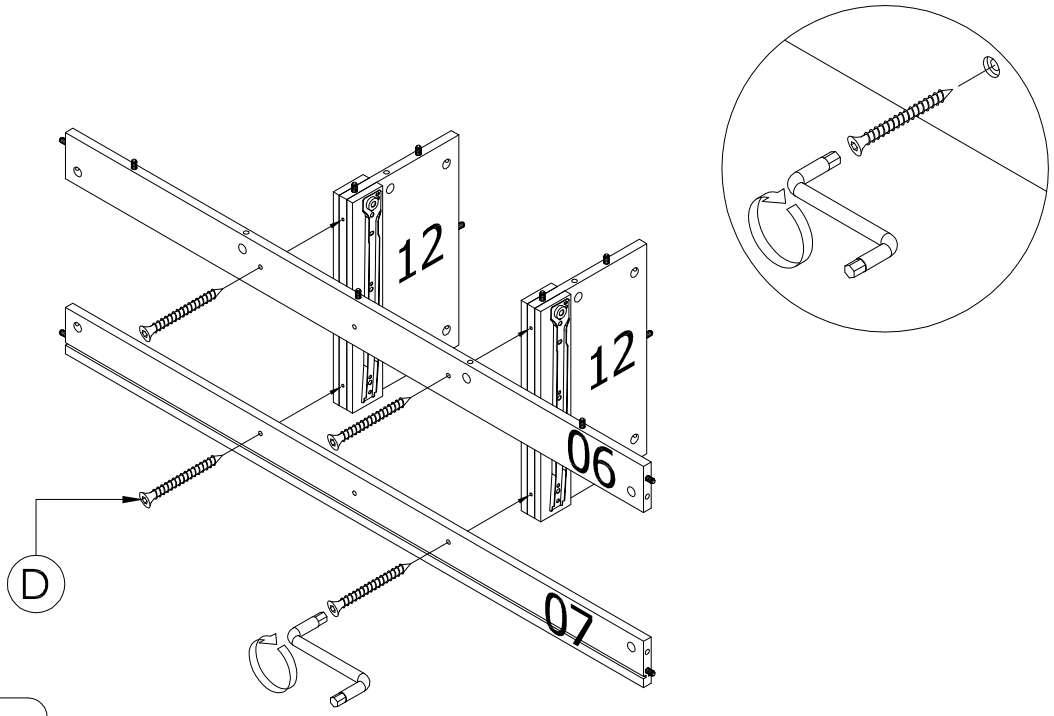

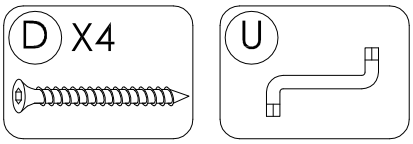

12

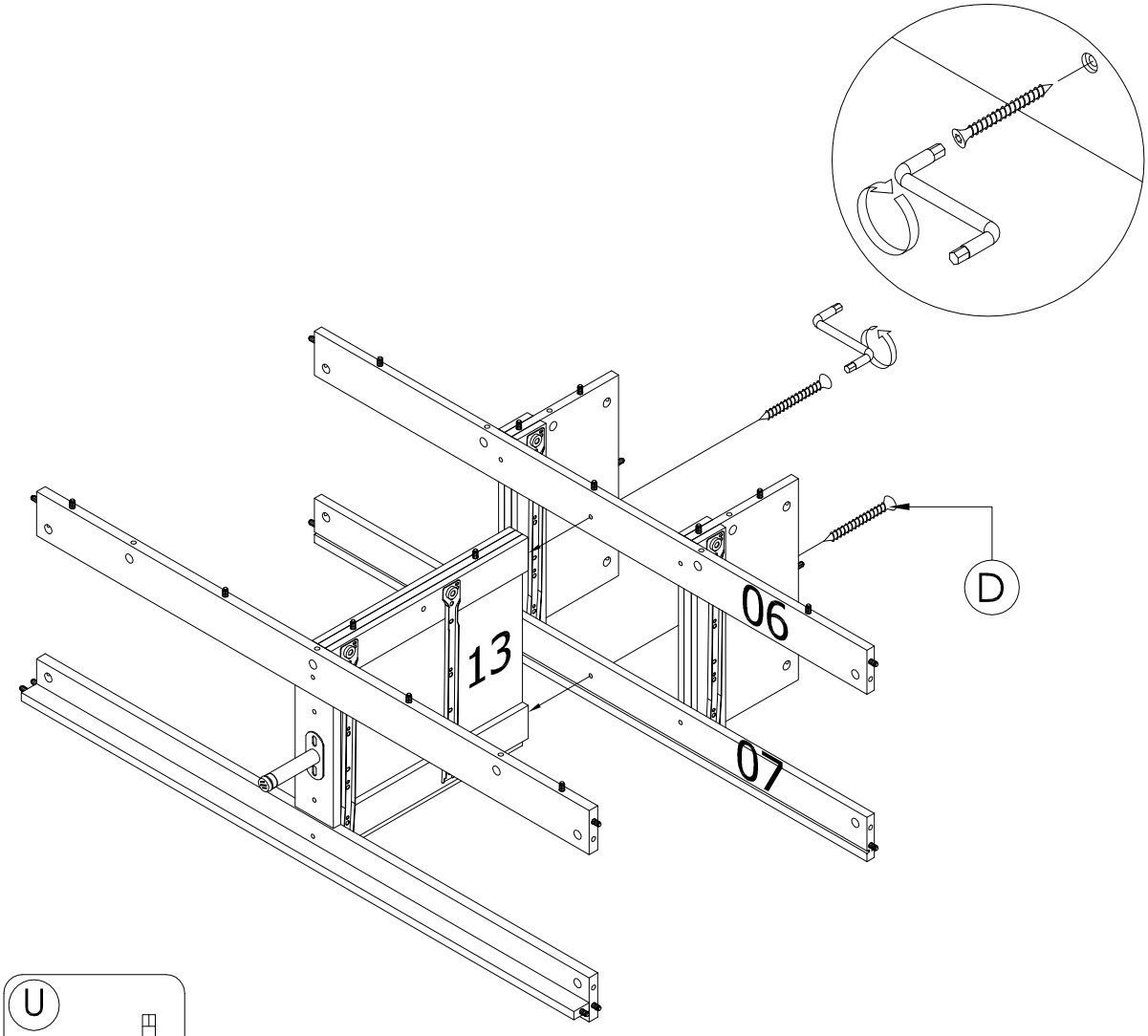

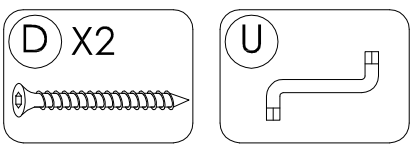

13

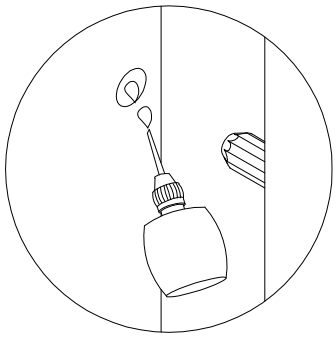

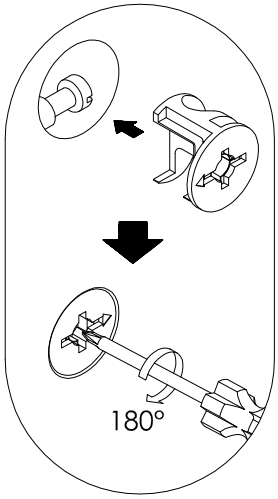

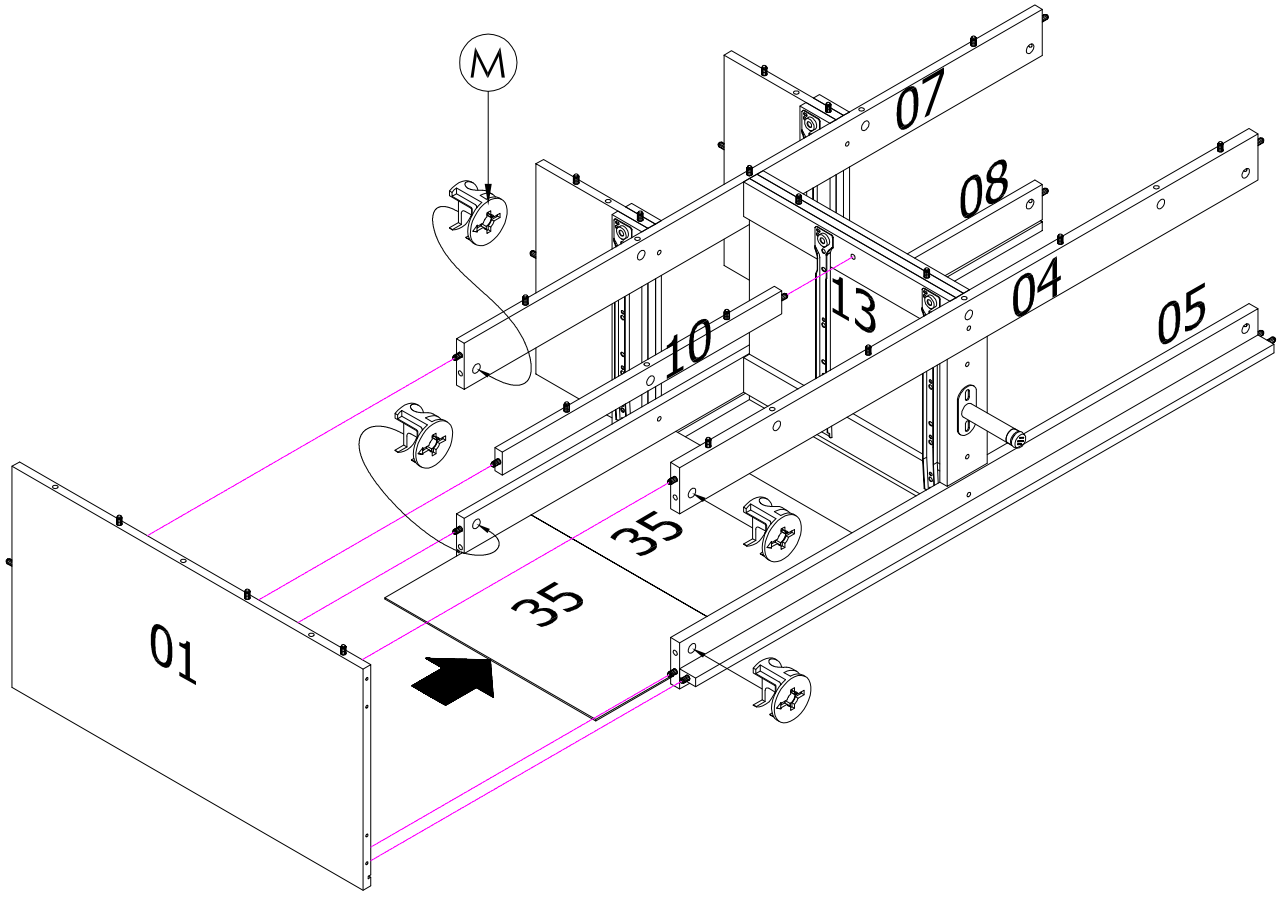

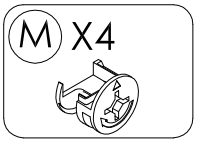

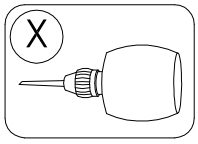

14

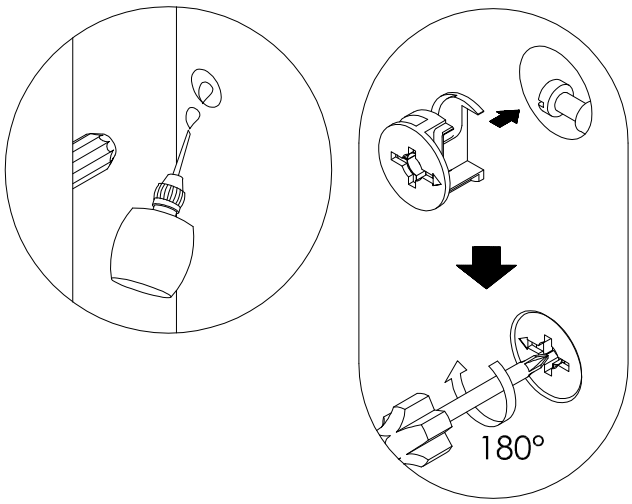

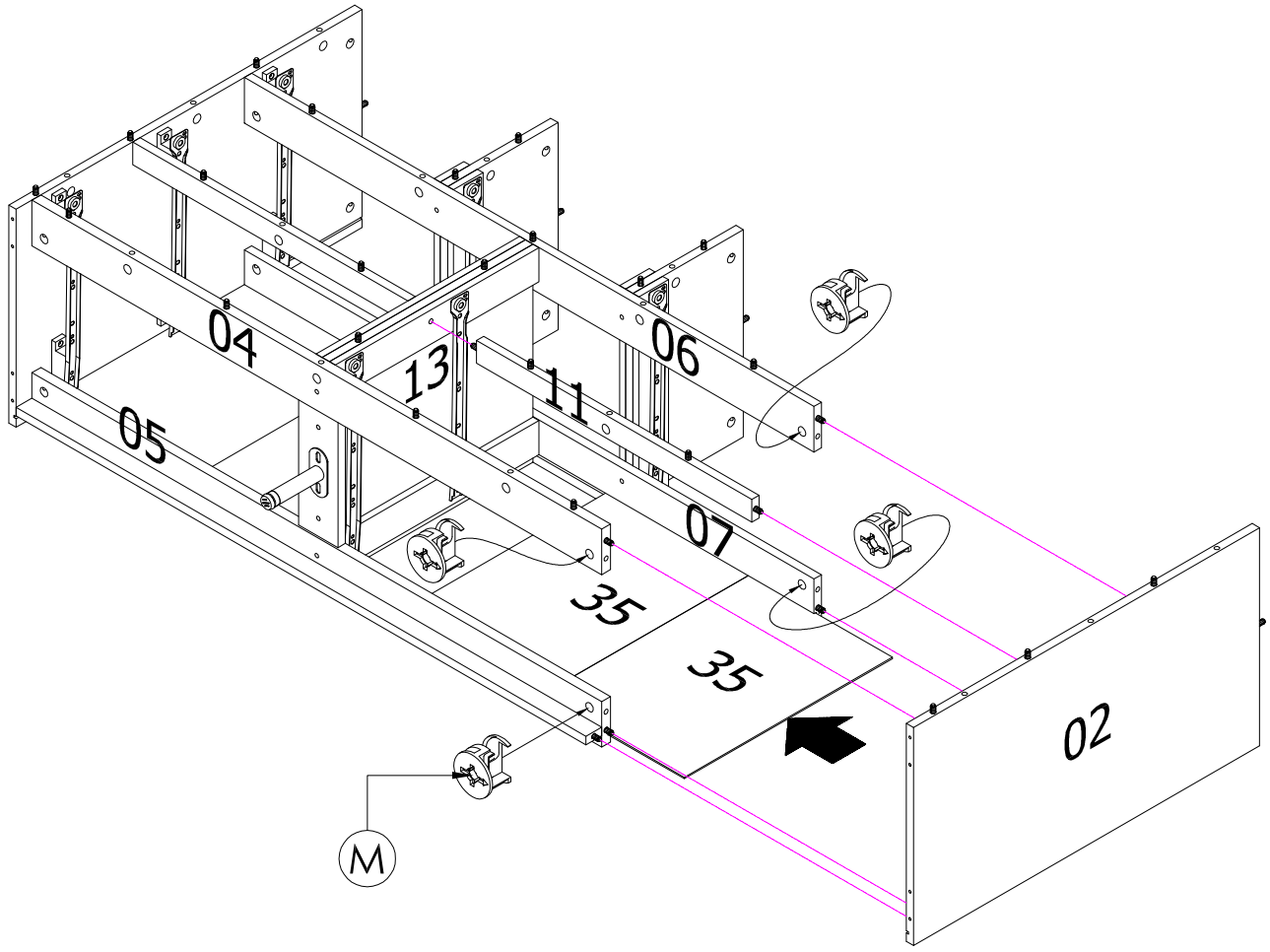

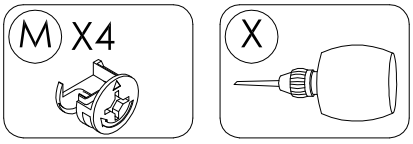

15

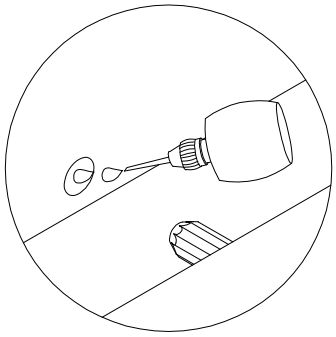

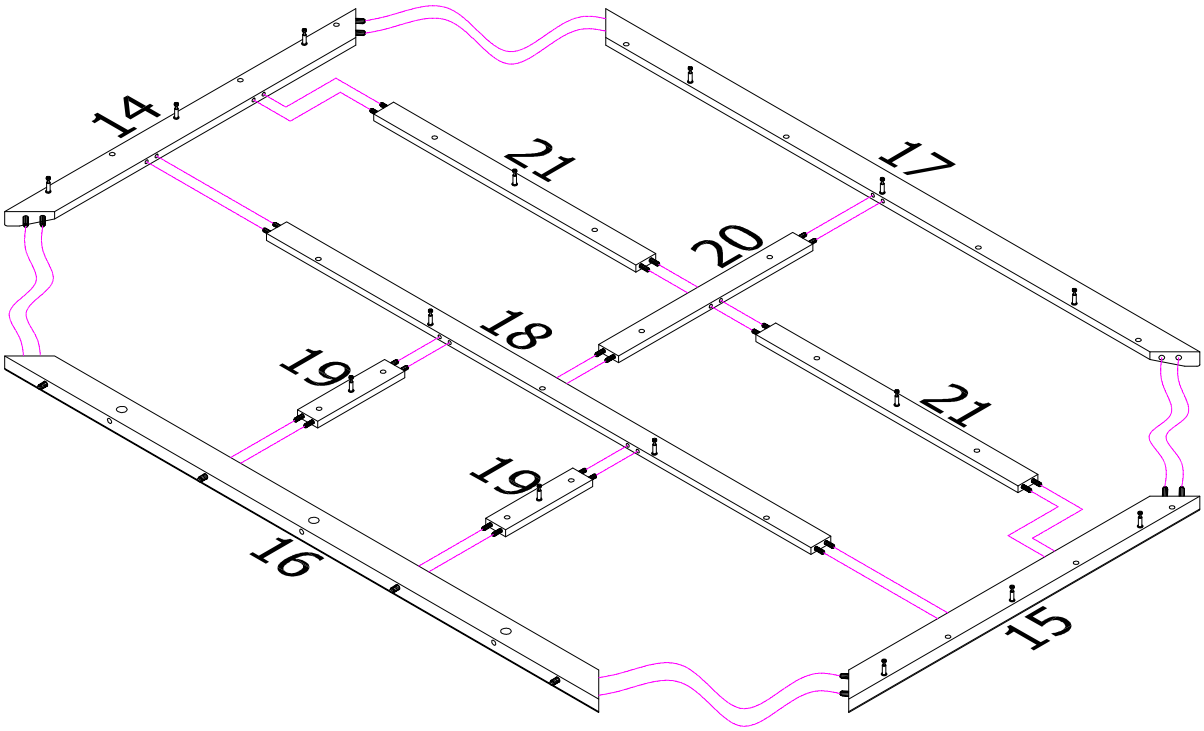

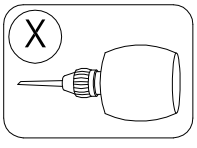

16

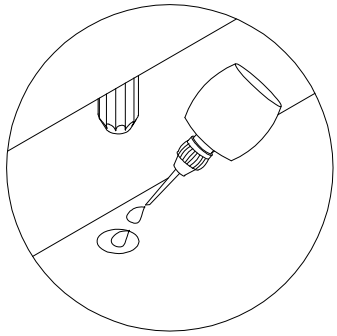

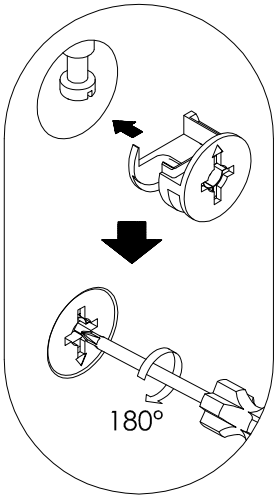

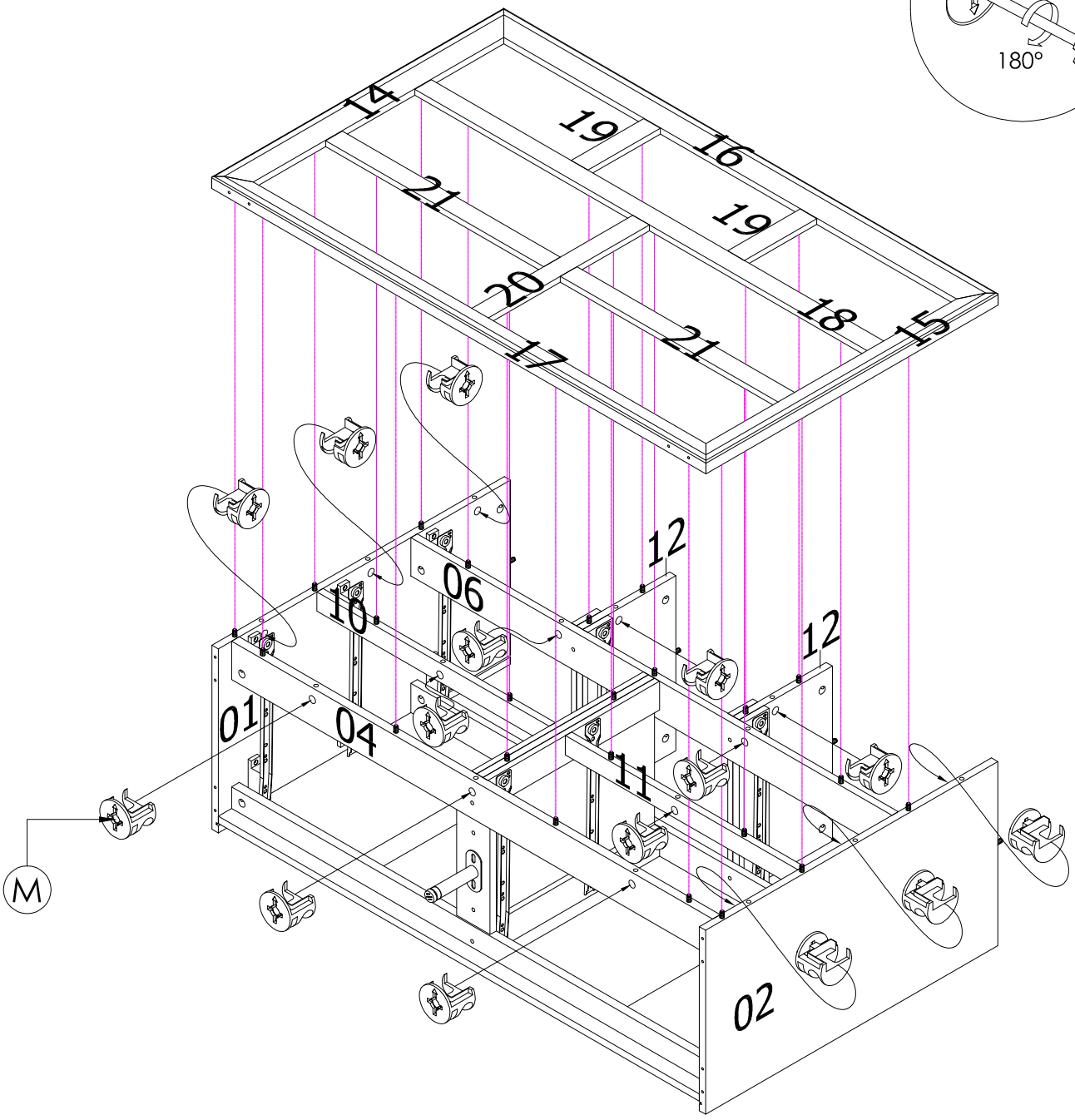

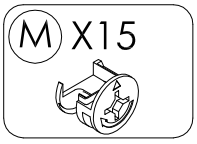

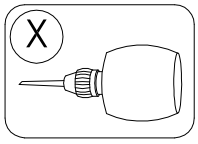

17

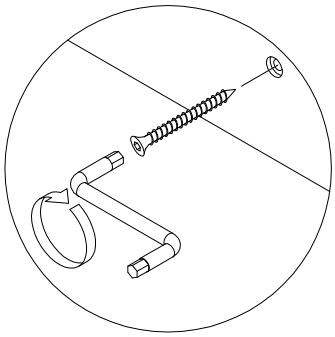

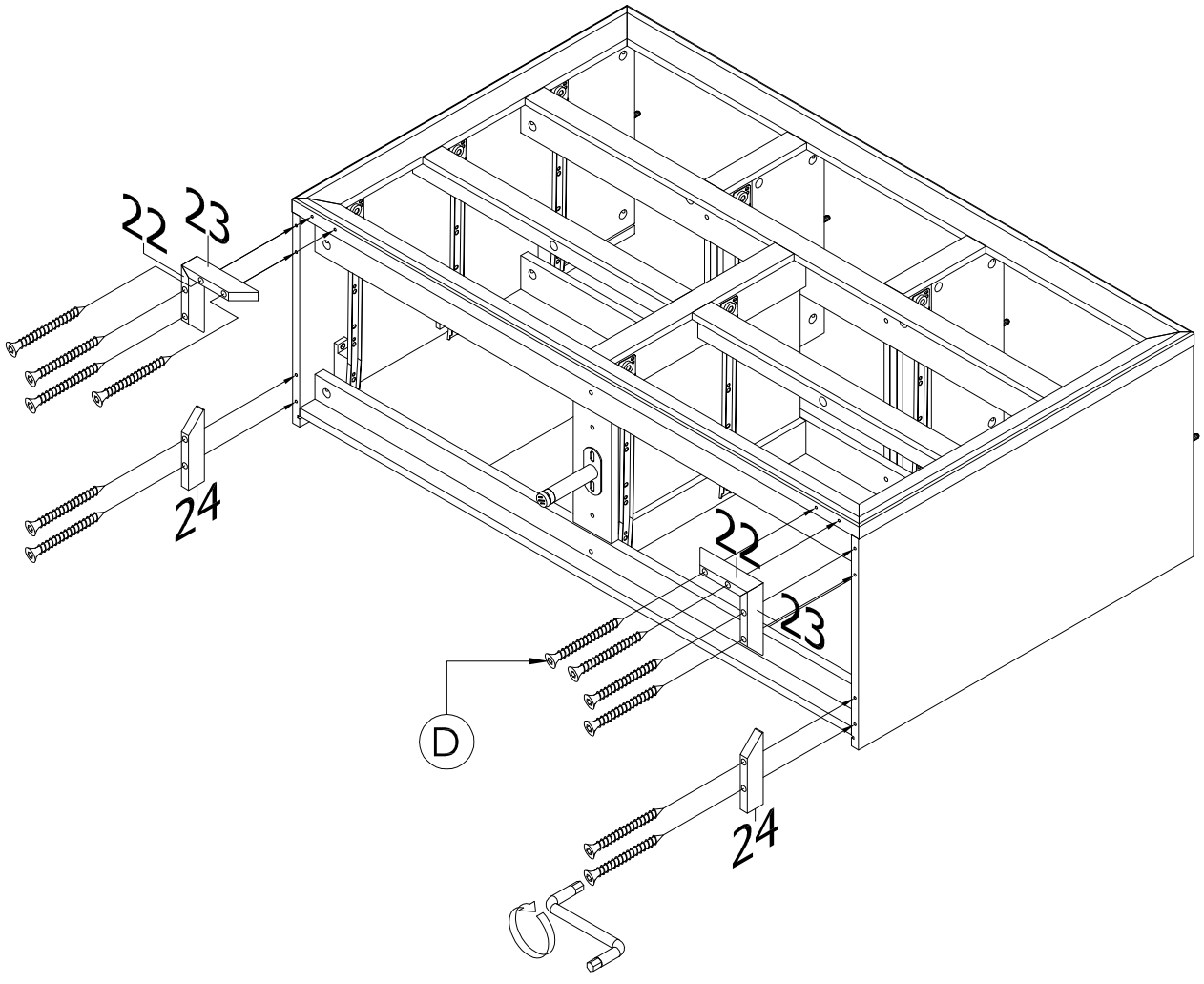

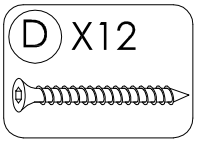

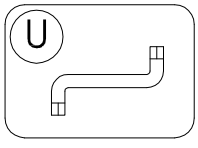

18

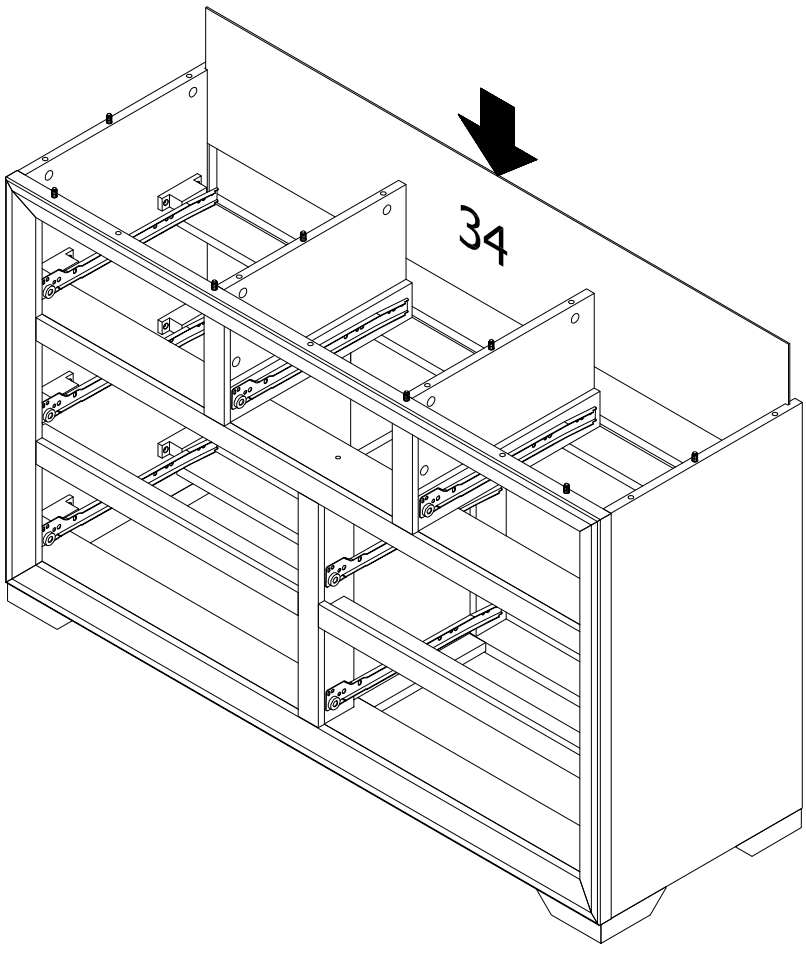

19

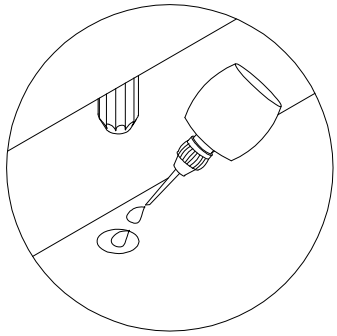

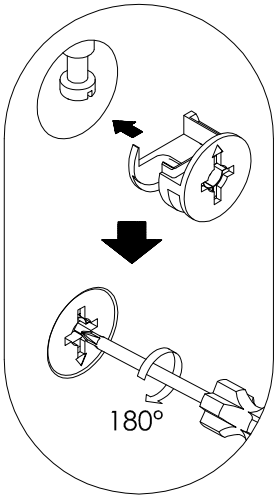

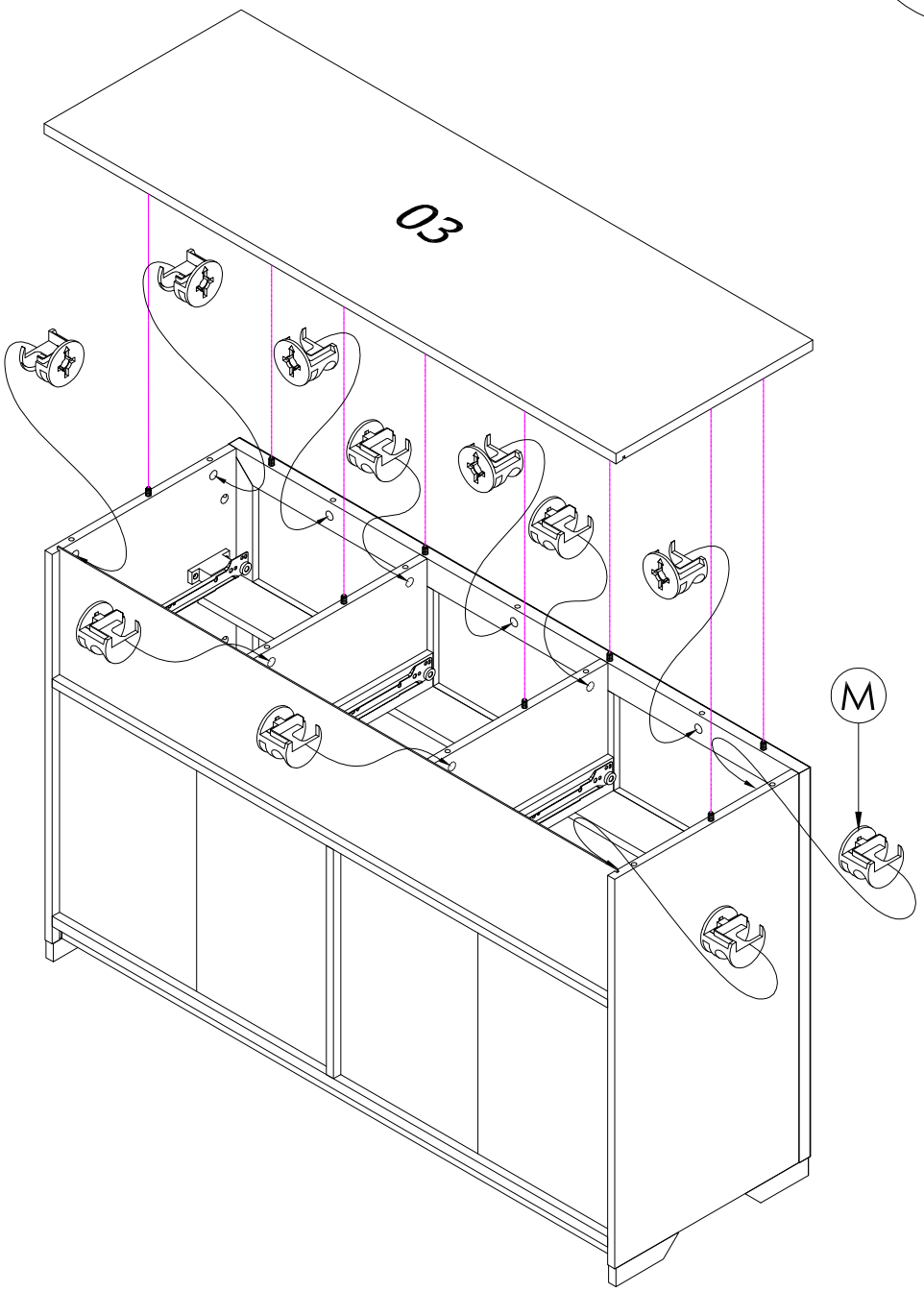

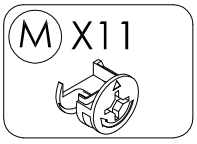

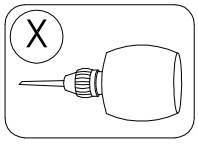

20

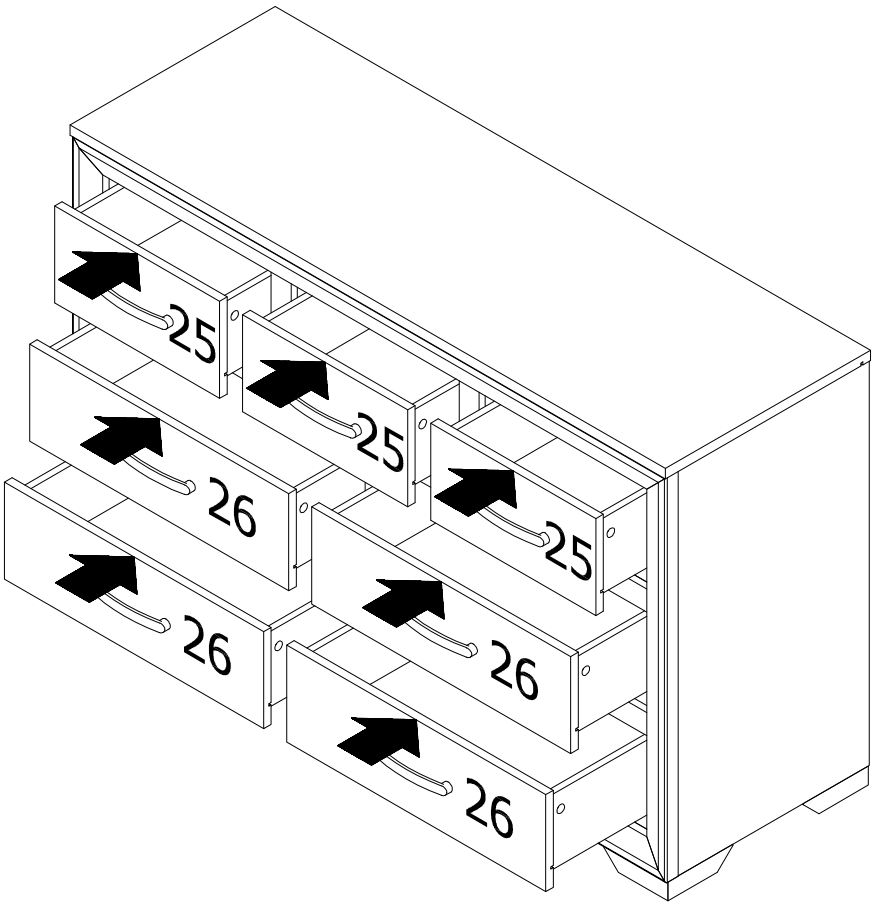

21

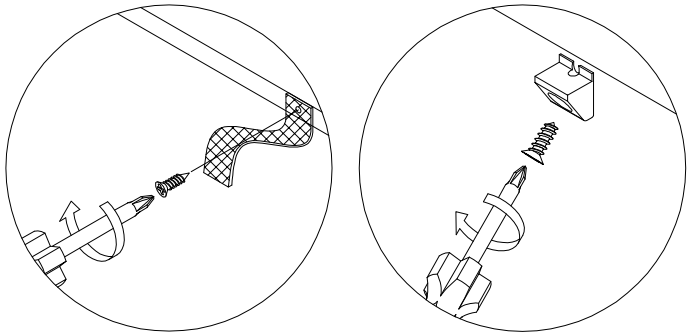

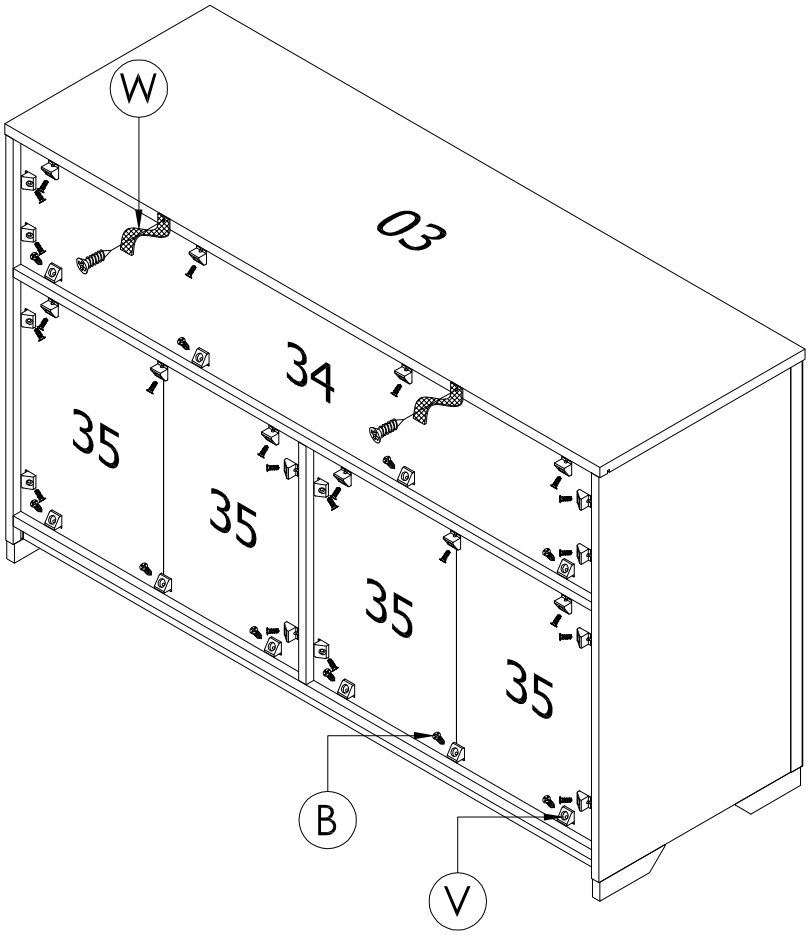

B X34

V X32

W X2

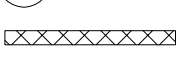

22

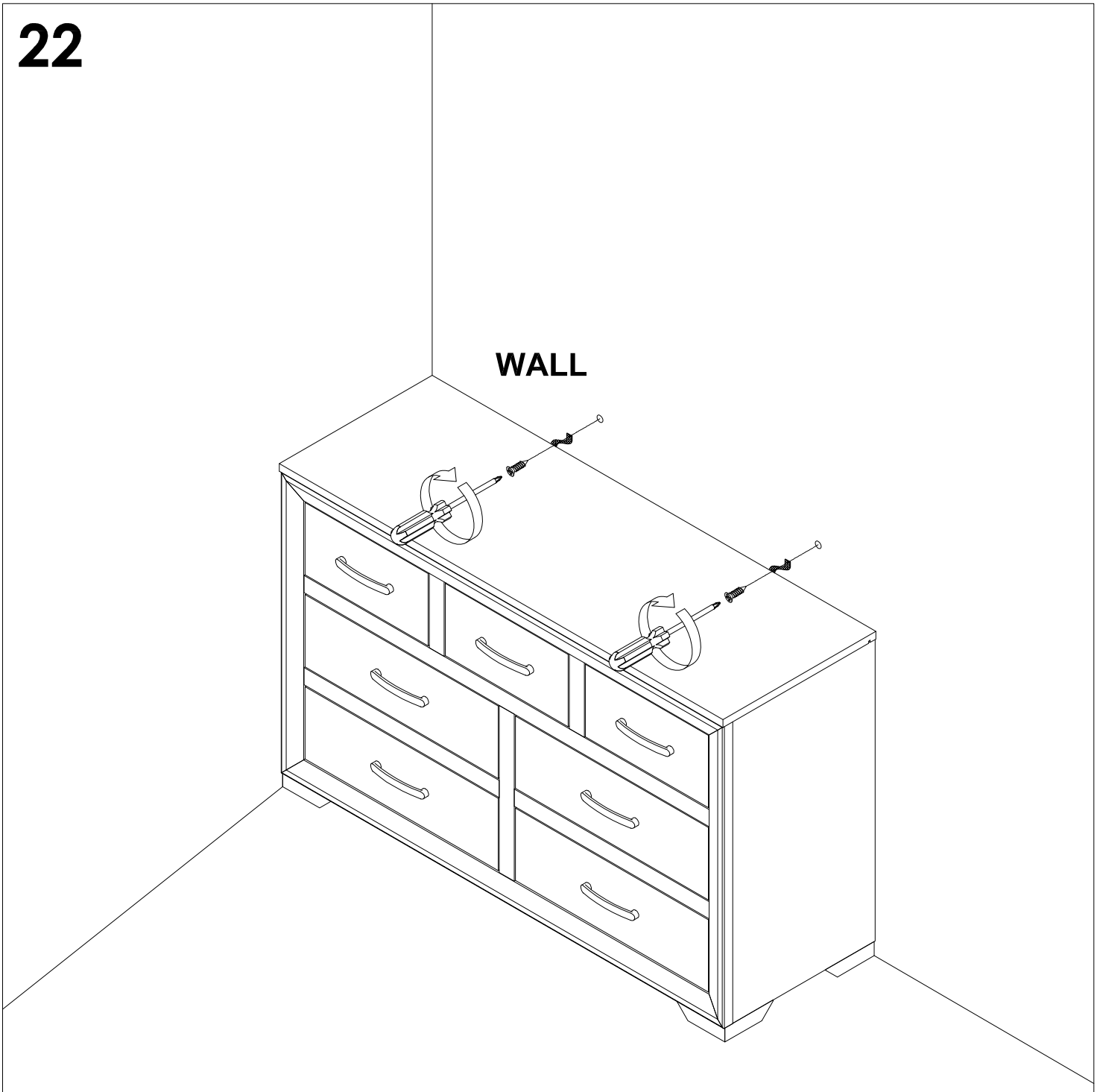

ADDITIONAL SAFETY INFORMATION

In the interest of safety, particularly where small children are concerned, we advise securing your furniture to the wall to prevent the product from tipping forwards when loaded.

The screw included in this fitting pack is only intended for fixing the safety strap to the piece of furniture.

Use fixing devices suitable for the walls in your home, (NOT INCLUDED).

If you are unsure what type of fixings to use, please seek further advice from your local DIY store.

General Care

Wipe clean with a slightly damp soft cloth.
Avoid the use of all household cleaners and abrasives.
When moving your furniture, carefully lift into place.
Never drag or push the pieces across the floor as this will cause damage to the joints and could result in failure to the product that will invalidate the warranty.

Recommendations

Periodical re-tightening of fixings.

Warning

This unit is heavy. Please use an assistant when lifting.

Notes

We've tried to make this piece of furniture as easy to assemble as possible.
In the unlikely event that you have problems putting it together or have damaged or missing pieces, please contact our customer services on 01623 727374