Fantastic Furniture

Version 1.2

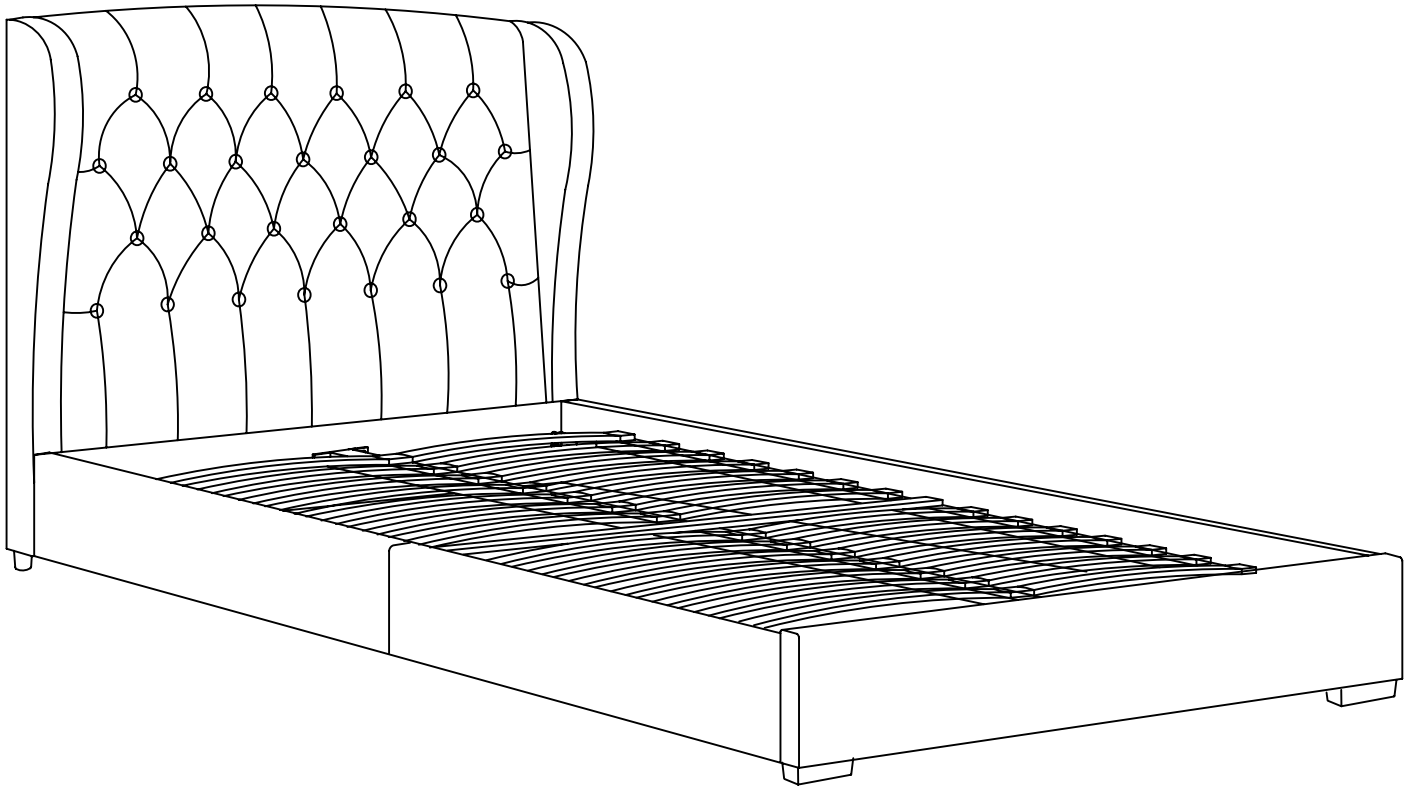

Tiffany

Queen Bed

fantasticfurniture.com.au

Looks like you've found your Fantastic!

We're thrilled you've chosen Fantastic Furniture to help create a home you'll love!

Fantastic Furniture

Love it? Share it!

Fantastic buy! Share how it looks at home on Instagram for your chance to win a $250 Fantastic Furniture Gift Card!
@fantasticfurniture

Assembly checklist

Read through the instructions carefully before you begin.

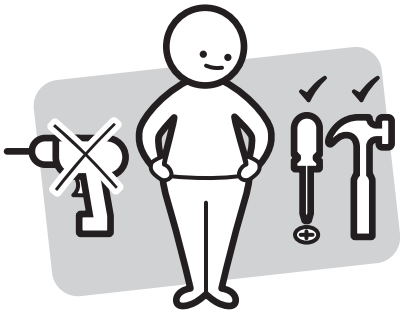

Make sure you have all the required tools. Never use power tools unless instructed.

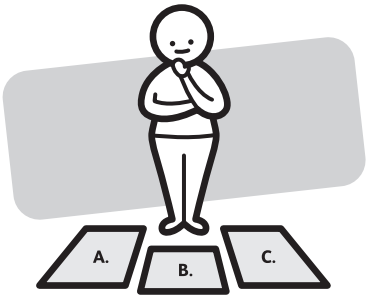

Identify and lay out all of the components before you begin assembly.

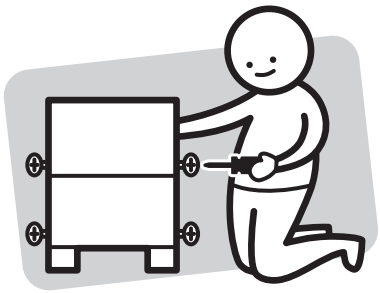

Unless instructed, do not fully tighten screws until the item is fully assembled.

Useful information

! Never use power tools unless specifically instructed. They can damage your components or hardware if used incorrectly.

! The most common mistakes made during assembly are using the wrong hardware or getting components back to front.

! Always use a soft surface (such as carpet or cardboard) when assembling your product to avoid scratching or damaging the surface of the product.

! Bulky items such as wardrobes and bunk beds should be assembled in the room they will be used as they may not fit through a door once assembled.

! Never use any glue until you are certain that the parts belong together.

! Periodically check and re-tighten all fasteners. Check the product care label or website for product care instructions.

! If you are having any difficulties assembling your product, missing any hardware or components please visit our website Help Centre for further assistance.

! Please see page 2 for any safety requirements or weight restrictions.

What you need
to assemble the product

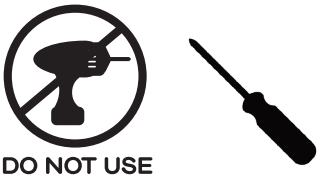

DO NOT USE

Other tools you need:
Phillips head screwdriver;

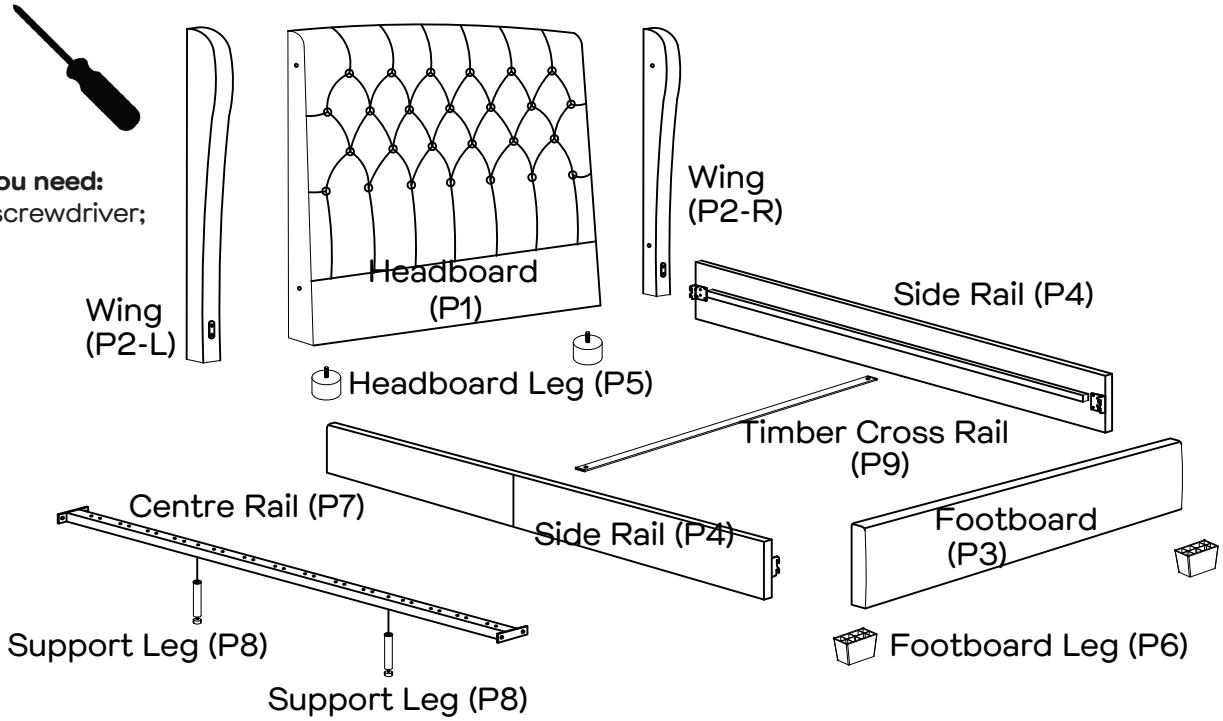

Parts list

Box 1 : Footboard (P3) ; 2 x Side Rail (P4) ; 2 x Headboard Leg (P5) ; 2 x Footboard Leg (P6) ; Centre Rail (P7) ; 2 x Support Leg (P8) ; Timber Cross Rail (P9) ; End Connectors (P10) ; Centre Connectors (P11) ; Hardware Pack.

Box 2 : Headboard (P1) ; Wing (P2-L) ; Wing (P2-R) ; Slats (P12)

28 x End Connectors (P10)

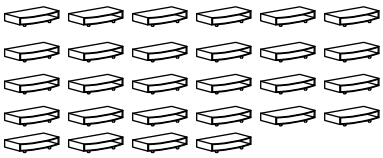

14 x Centre Connectors (P11)

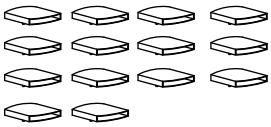

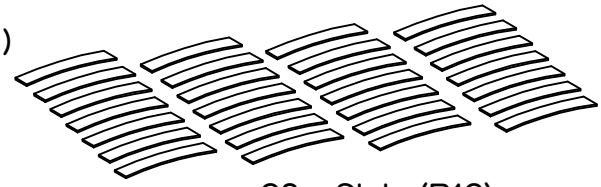

28 x Slats (P12)

Hardware pack

(Bolt)
8 x M8 x 18mm
(H1)

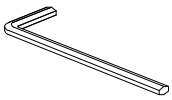

1 x M5 (Allen Key)
(H2)

(Bolt)
4 x M8 x 45mm
(H3)

(Washer)
10 x M8 x 19mm
(H4)

(Bolt)
6 x M8 x 25mm
(H5)

(Large Screw)
4 x M4 x 51mm
(H6)

(Felt Pad)
1 x 40 x 20mm
(H7)

(Small Screw)
2 x M4 x 32mm
(H8)

Fantastic Furniture

Step 1

You will need		
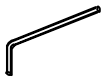		
Allen Key (H2)	4 x Bolts 45mm (H3)	4 x Washers M8 (H4)

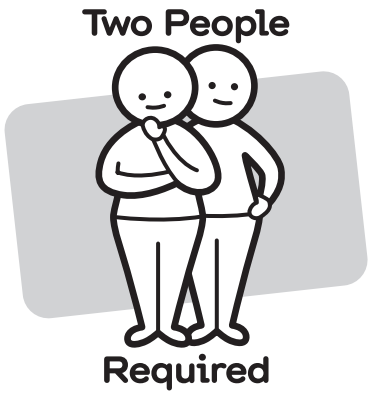

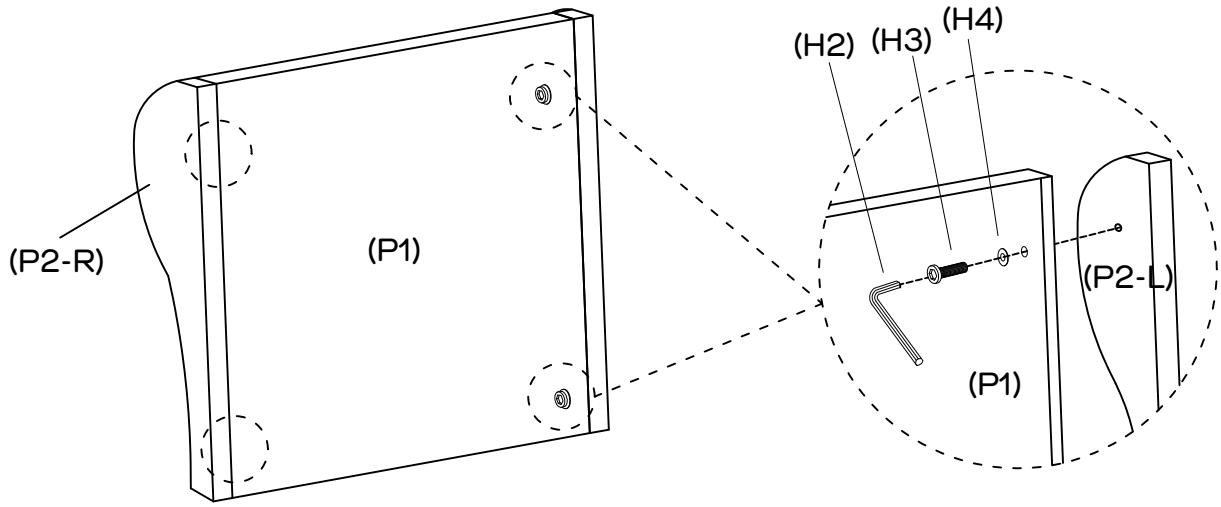

Attach wings (P2-L ; P2-R) to the headboard (P1) with 4 x washers (H4) and 4 x bolts 45mm (H3) by using allen key (H2) as shown.

Step 2

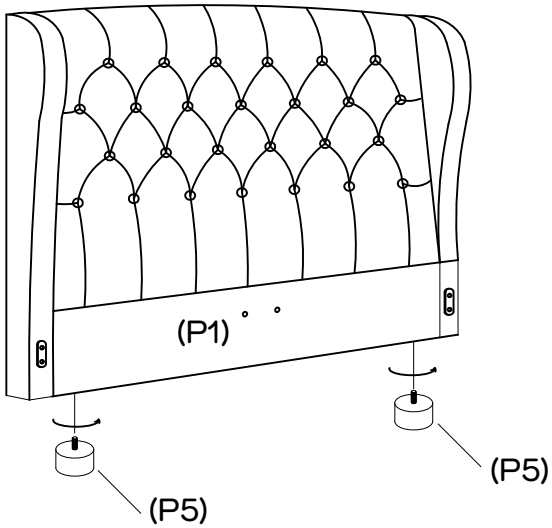

Attach 2 x headboard legs (P5) to the bottom of headboard (P1) as shown.

Step 3

You will need	
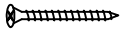	
4 x Large Screws 51mm (H6)	Phillips head Screwdriver (not provided)

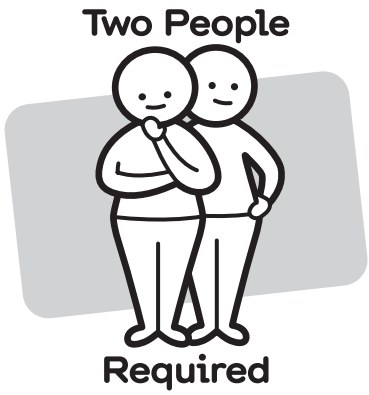

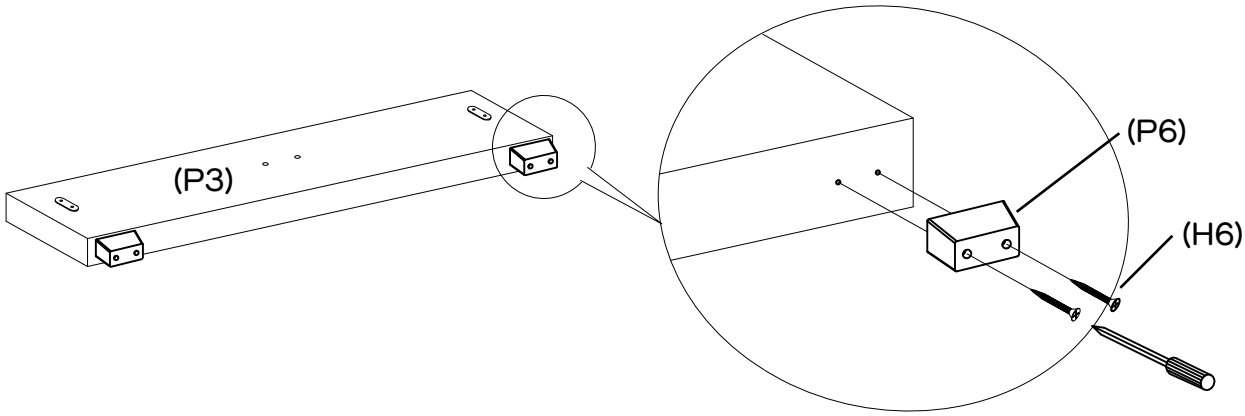

Attach 2 x footboard legs (P6) to the bottom of footboard (P3) with 4 x large screw 51mm (H6) by using phillips head screwdriver (not provided).

Step 4

You will need	
	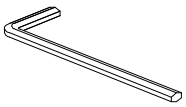
8 x Bolts 18mm (H1)	Allen Key (H2)

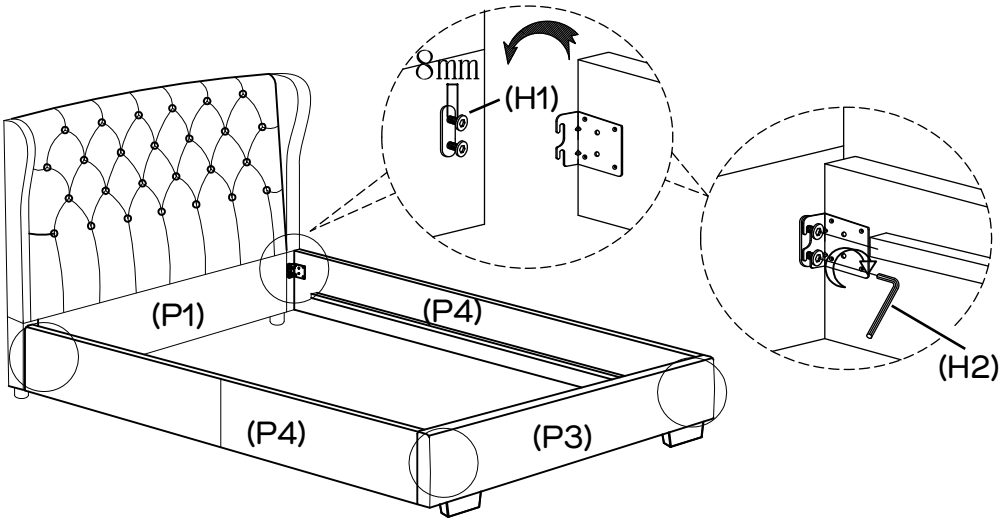

Install the bolts (H1) to the brackets by using allen key (H2) as shown, do not tighten the bolts and keep them 8mm loose. Then attach 2 x side rails (P4) to headboard (P1) and footboard (P3) by slotting the bracket on the side rails (P4) over the bolt as shown.
No need to tighten bolts until step 8.

Step 5

You will need		
2 x Washers M8 (H4)	2 x Bolts 25mm (H5)	Phillips head Screwdriver (not provided)

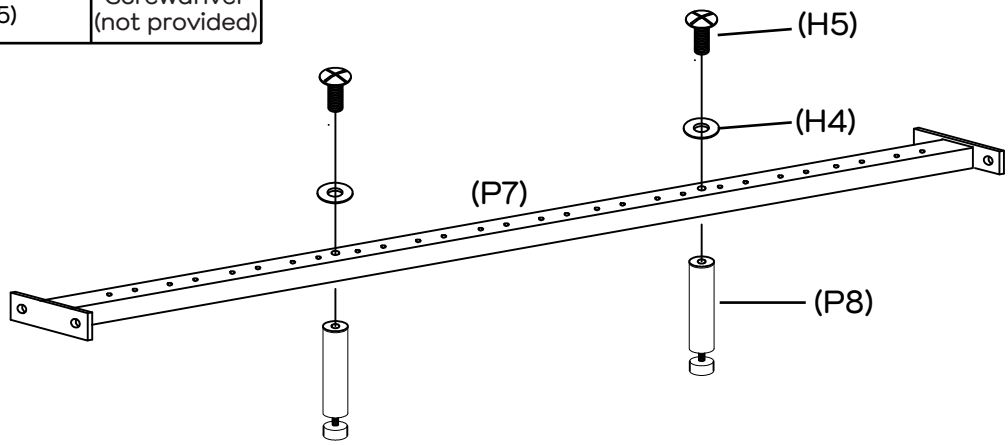

Attach 2 x support legs (P8) to the centre rail (P7) using 2 x bolts (H5) and 2 x washers (H4) as shown.

Step 6

You will need		
4 x Washers M8 (H4)	4 x Bolts 25mm (H5)	Phillips head Screwdriver (not provided)

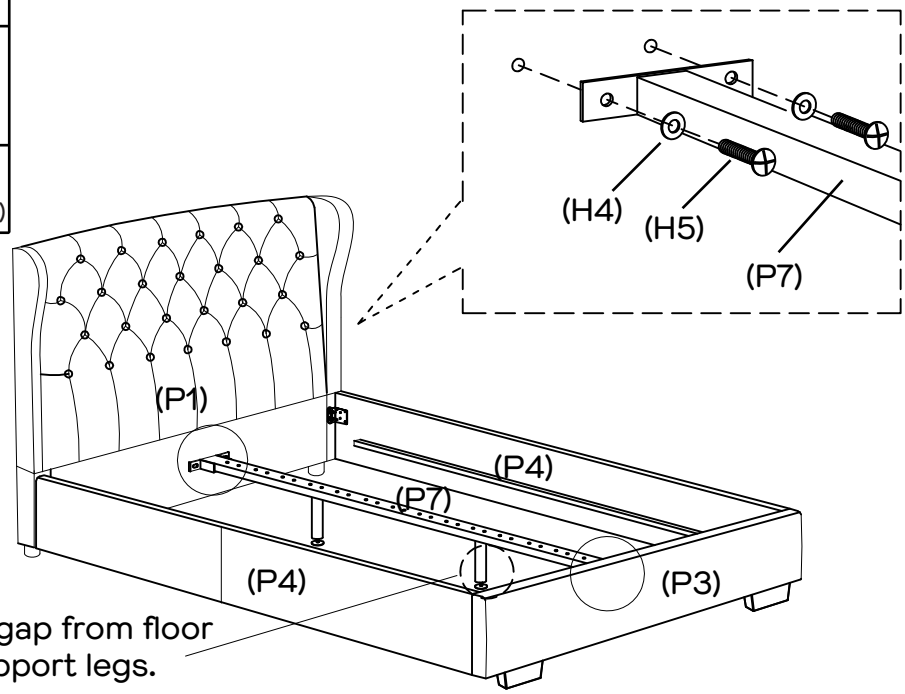

Slot the centre rail (P7) into the headboard (P1) and footboard (P3).
Rotate bolts (H5) by using phillips head screwdriver (not provided) to the headboard (P1) and footboard (P3). No need to tighten bolts until step 8.

Step 7

You will need	
28 x End Connectors (P10)	14 x Centre Connectors (P11)
28 x Slats (P12)	

1

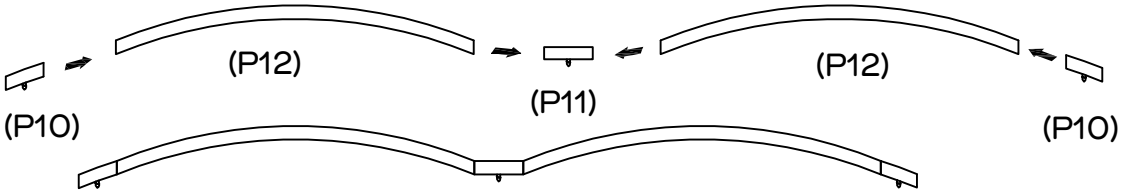

Push 2 end connectors (P10), 2 pcs slats (P12) and a centre connector (P11) together.

2

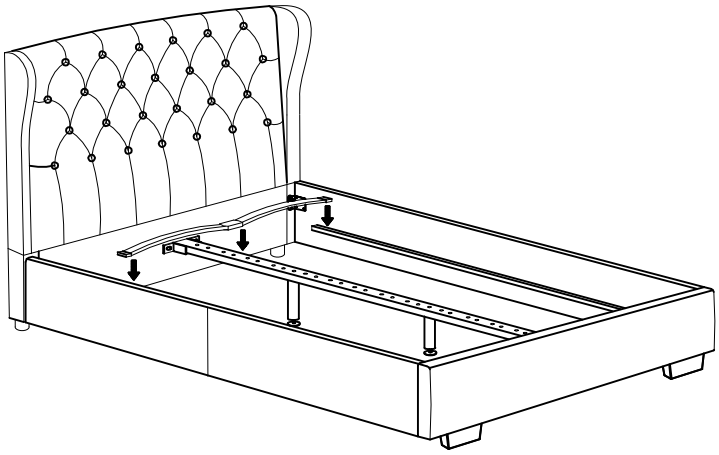

Insert the full slat into the side rail and centre rail one by one.

3

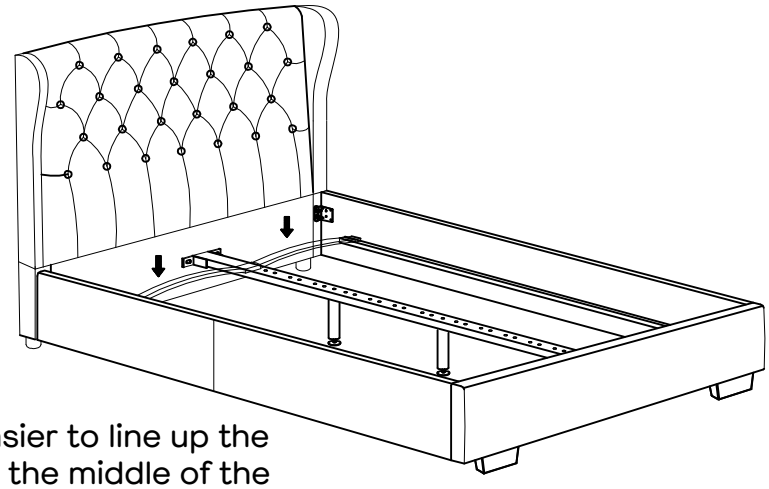

Sometimes it makes it easier to line up the hole if you press down in the middle of the slat to flatten it out.

4

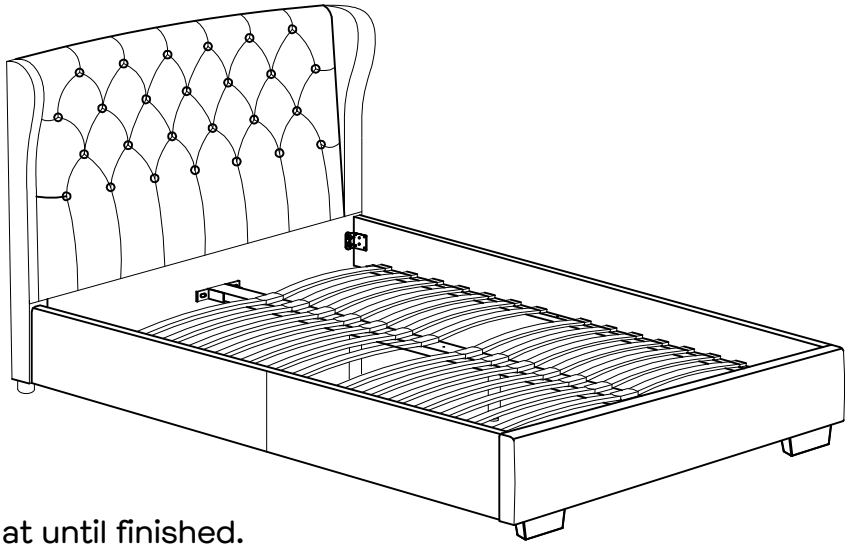

Repeat for every bed slat until finished.

Step 8

You will need	
Allen Key (H2)	Felt Pad 1 x 40 x 20mm (H7)
2 x Small Screws 32mm (H8)	Phillips head Screwdriver (not provided)

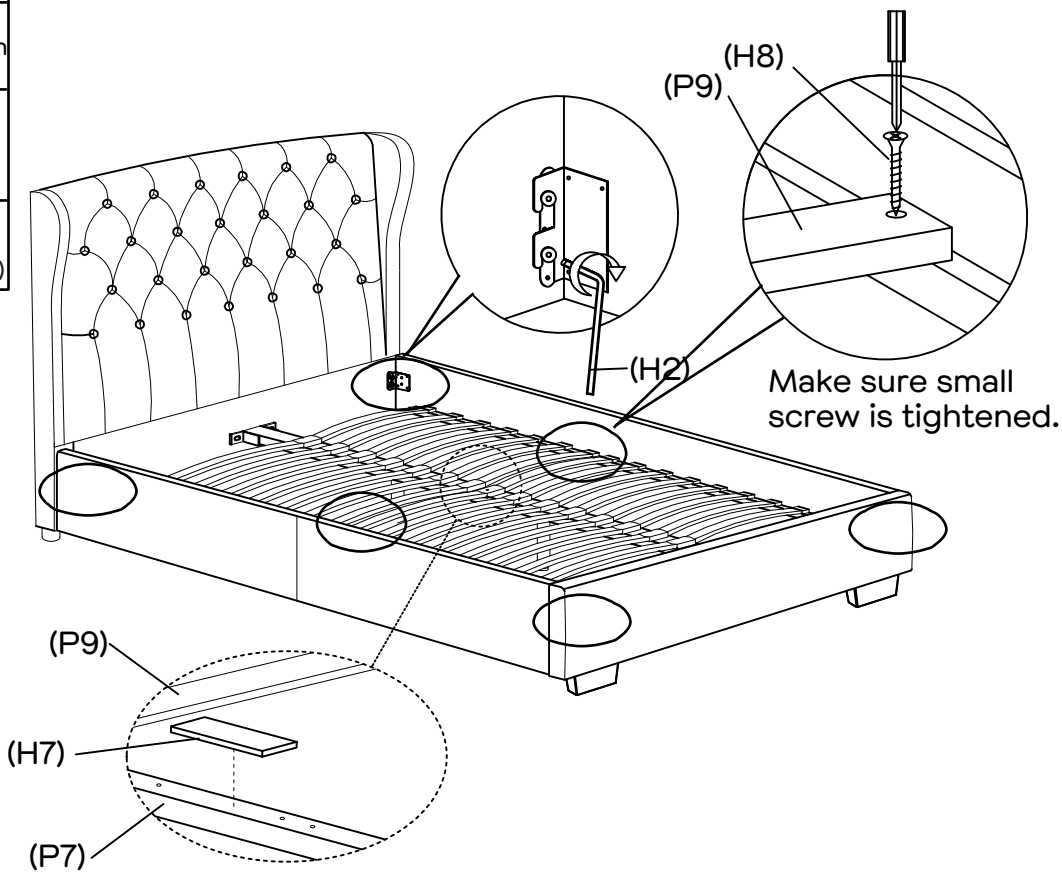

Make sure the inner space is square.
Attach the felt pad (H7) to the centre of centre rail (P7).
Then attach the timber cross rail (P9) to the centre of side rails (P4) by using 2 x screws (H8).
Now tighten all the bolts on the centre rail (P7) and tighten bolts on the headboard (P1) and footboard (P3).

Step 9

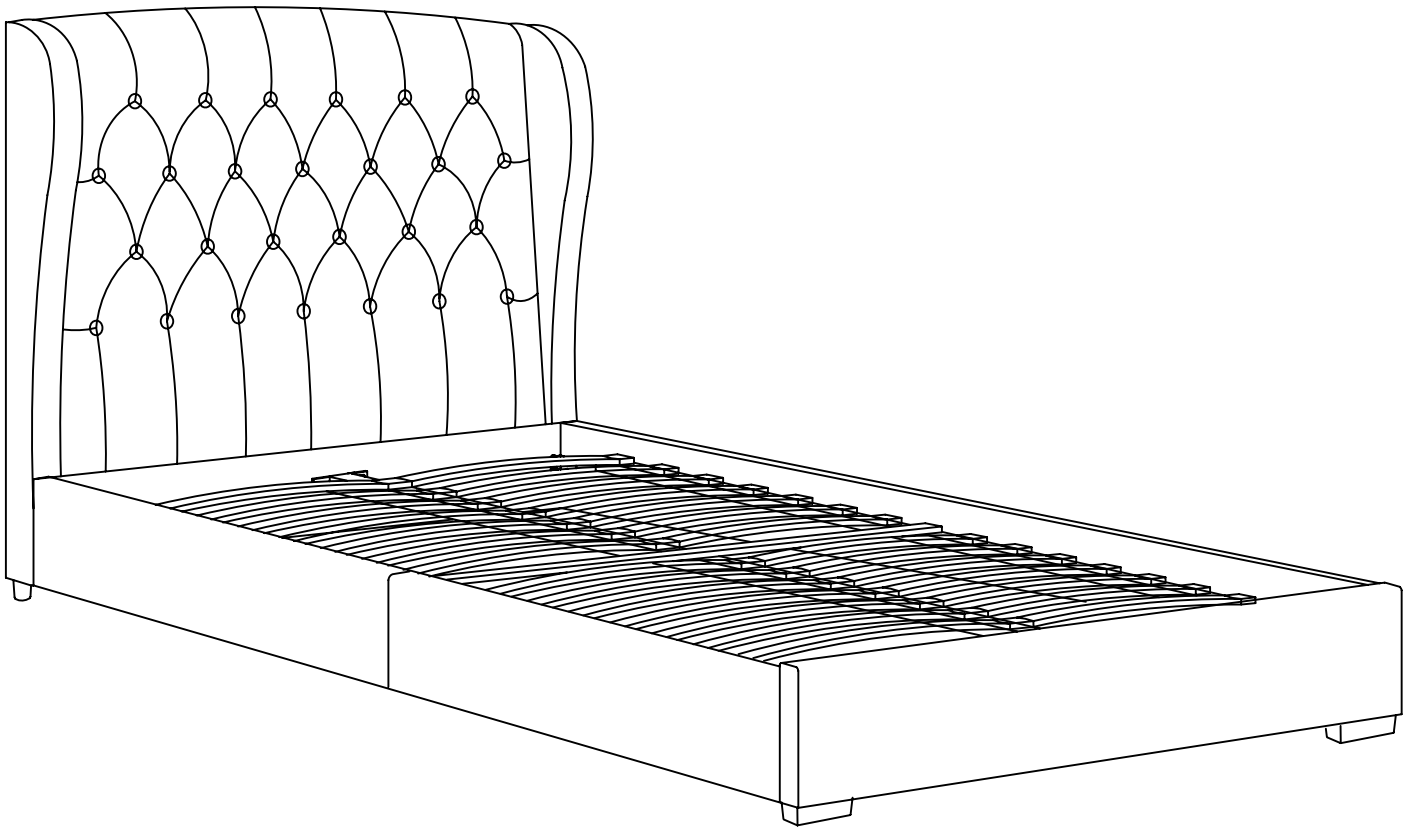

Job complete!

In the interest of our environment please dispose of all packaging thoughtfully.

Fantastic Furniture