Version 1.0

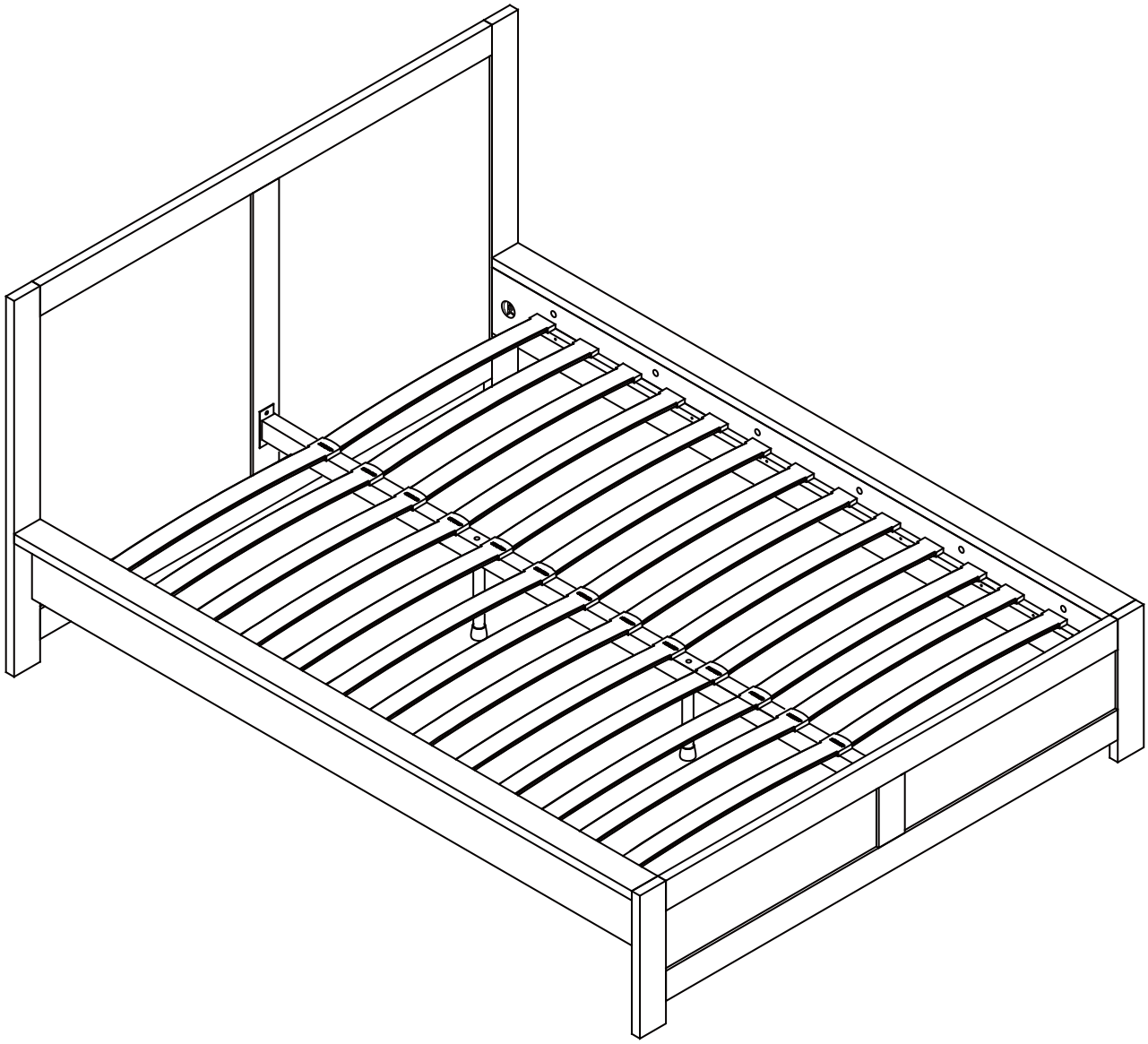

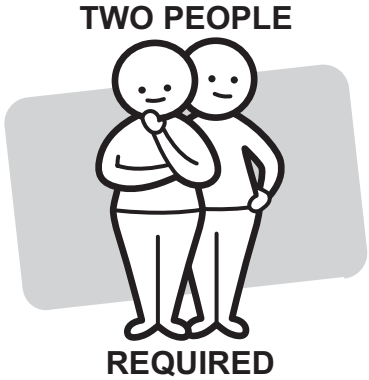

HAVANA

Bed Double (Frame Only)

www.fantasticfurniture.com.au

Enjoy

Your purchase from
Australia's Best Value Furniture Store

Assembly checklist

Read through the instructions carefully before you begin.

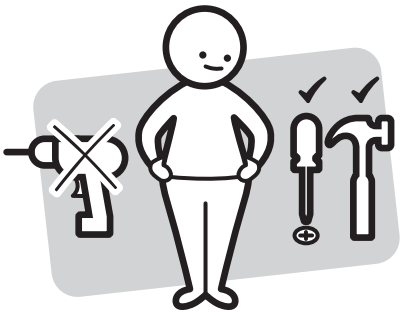

Make sure you have all the required tools. Never use power tools unless instructed.

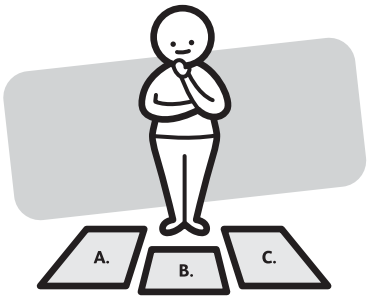

Identify and lay out all of the components before you begin assembly.

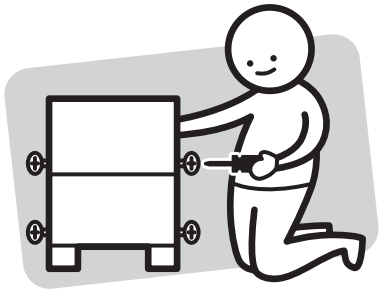

Unless instructed, do not fully tighten screws until the item is fully assembled.

Useful Information

! Never use power tools unless specifically instructed. They can damage your components or hardware if used incorrectly.

! The most common mistakes made during assembly are using the wrong hardware or getting components back to front.

! Always use a soft surface (such as carpet or cardboard) when assembling your product to avoid scratching or damaging the surface of the product.

! Bulky items such as wardrobes and bunk beds should be assembled in the room they will be used in as they may not fit through a door once assembled.

! Never use any glue until you are certain that the parts belong together.

! Periodically check and re-tighten all fasteners. Check the product care label or website for product care instructions.

! If you are having any difficulties assembling your product, missing any hardware or components please visit our website Help Centre for further assistance.

What you need
to assemble the product

Additional Tools Required
Flat head screwdriver;
Phillips head screwdriver;
Hammer

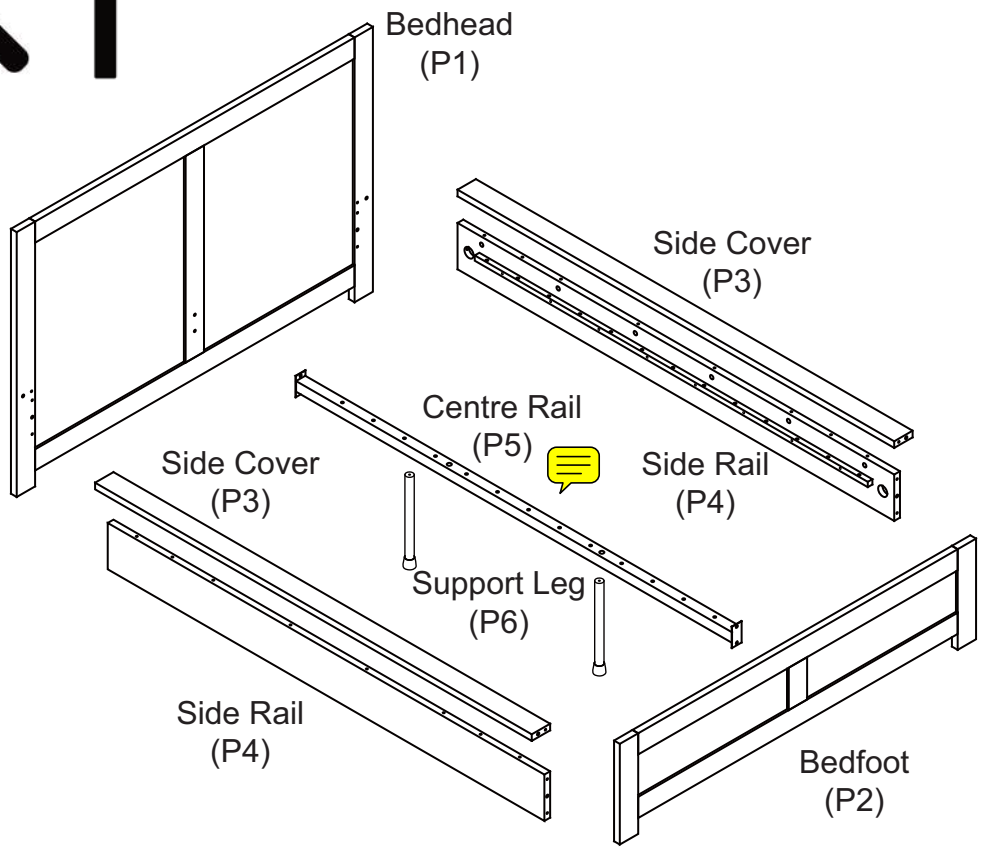

Parts list
Box 1: Bedhead (P1);
Bedfoot (P2);

Box 2: 2 x Side Covers (P3);
2 x Side Rails (P4);
Centre Rail (P5);
2 x Support Legs (P6);

26 x End Connectors

13 x Centre Connectors

26 x Fantastic Furniture ComfortSlats™Double

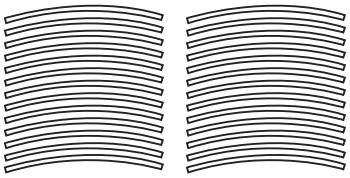

Hardware pack

16 x Dowels
(H1)

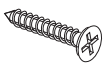

4 x Screws
(H2)

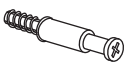

12 x Cam Bolts
(H3)

12 x Cam Nuts
(H4)

8 x Half Round Nuts
(H5)

8 x Threaded Rod
(H6)

8 x Hexagonal Nuts
(H7)

1 x Spanner
(H8)

4 x Plastic Glides
(H9)

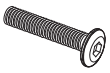

2 x Long Bolts
(H10)

1 x Allen Key
(H11)

Step 1

You will need	
6 x Dowels (H1)	4 x Threaded Rod (H6)
2 x Plastic Glides (H9)	Hammer

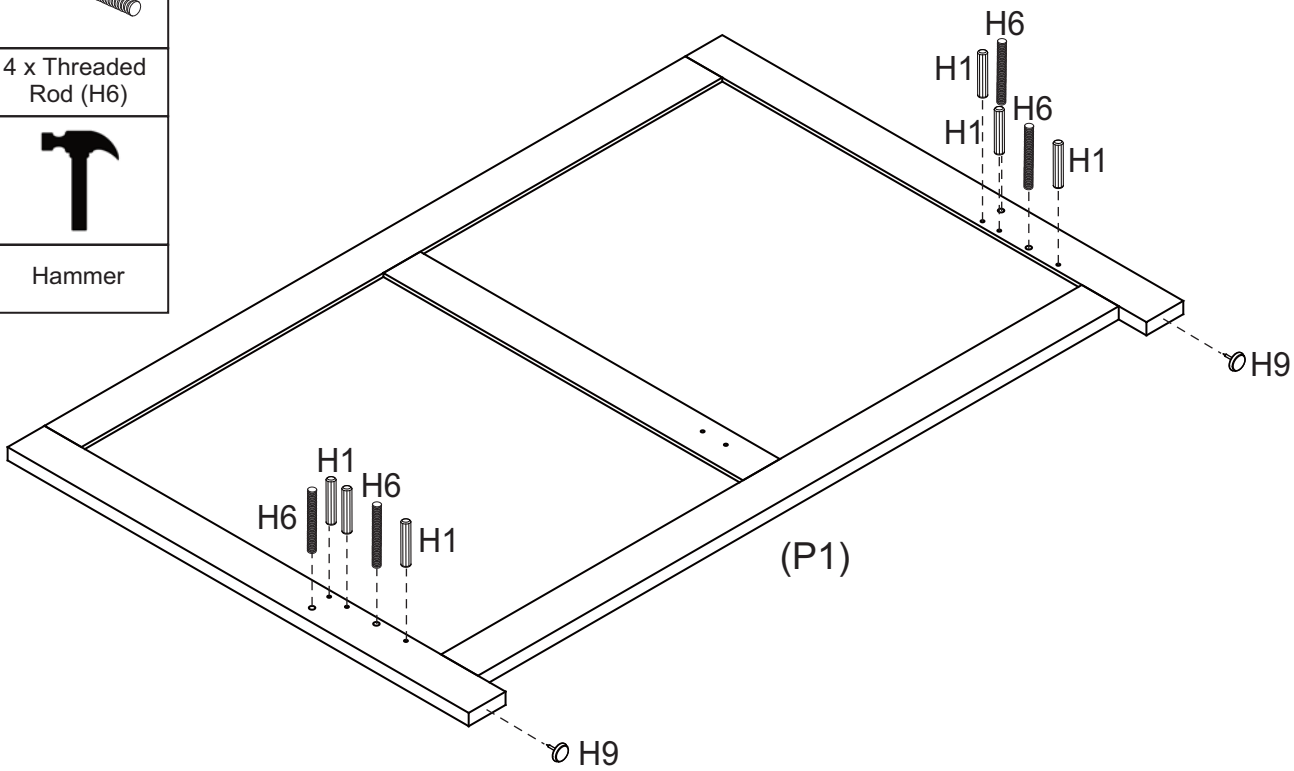

Insert 6 x Dowels (H1) into Bedhead (P1).
Attach 4 x Threaded Rod (H6) into Bedhead (P1).
Hammer 2 x Plastic Glides (H9) onto the bottom of Bedhead (P1).

Step 2

You will need	
6 x Dowels (H1)	4 x Threaded Rod (H6)
2 x Plastic Glides (H9)	Hammer

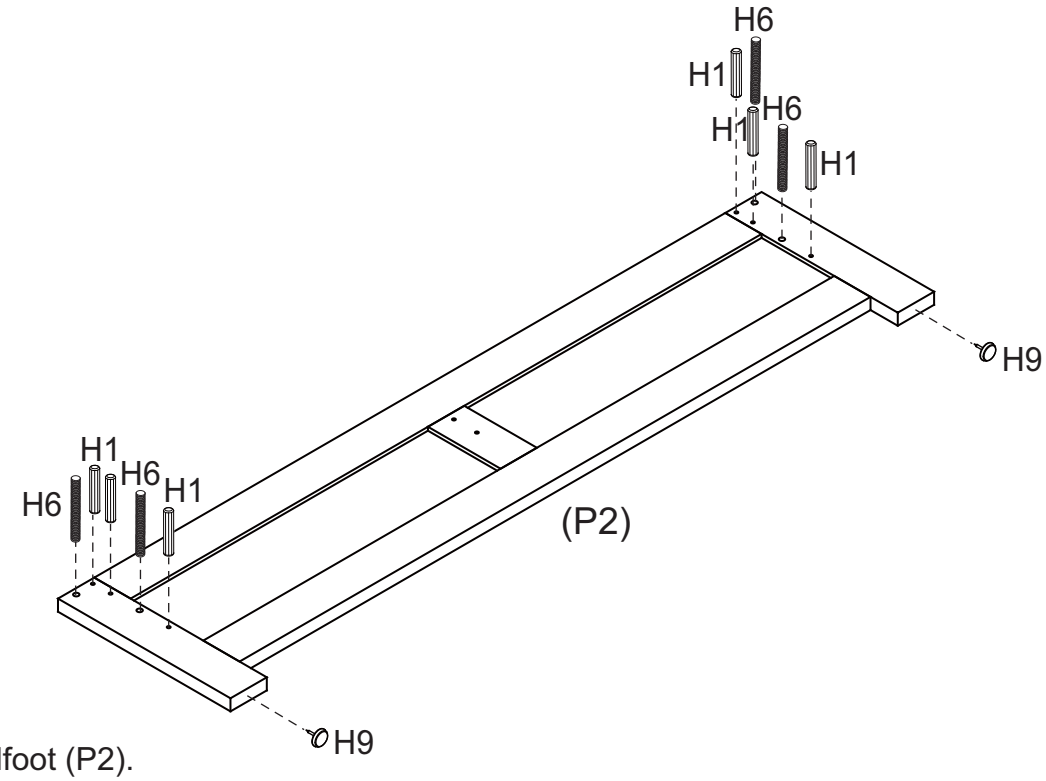

Insert 6 x Dowels (H1) into Bedfoot (P2).
Attach 4 x Threaded Rod (H6) into Bedfoot (P2).
Hammer 2 x Plastic Glides (H9) onto the bottom of Bedfoot (P2).

Step 3

You will need	
4 x Dowels (H1)	12 x Cam Bolts (H3)
12 x Cam Nuts (H4)	Phillips head screwdriver
Flat head screwdriver	

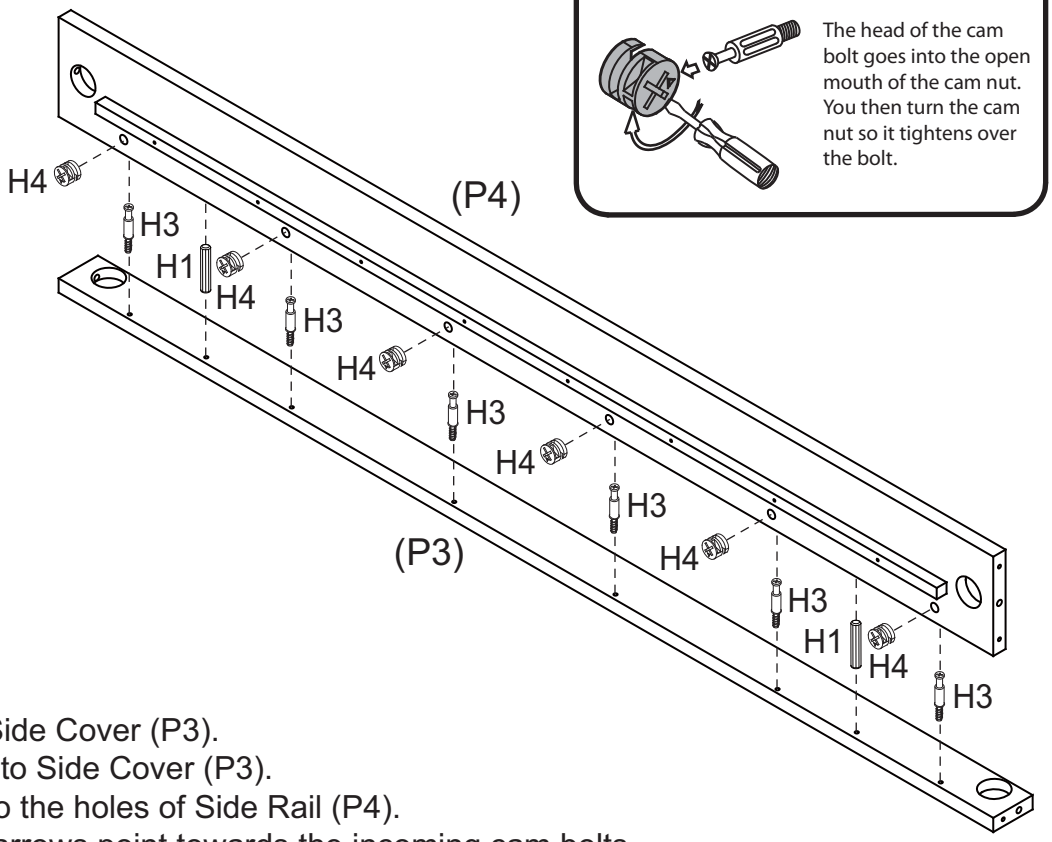

This is how a cam nut works.....

The head of the cam bolt goes into the open mouth of the cam nut. You then turn the cam nut so it tightens over the bolt.

Insert 2 x Dowels (H1) into Side Cover (P3).
Attach 6 x Cam Bolts (H3) into Side Cover (P3).
Insert 6 x Cam Nuts (H4) into the holes of Side Rail (P4).
Rotate the cam nuts so the arrows point towards the incoming cam bolts.
Attach Side Cover (P3) to Side Rail (P4), then tighten the cam nuts.
Repeat Step 3 for the other Side Cover (P3) and Side Rail (P4).

Step 4

You will need	
4 x Half Round Nuts (H5)	4 x Hexagonal Nuts (H7)
1 x Spanner (H8)	

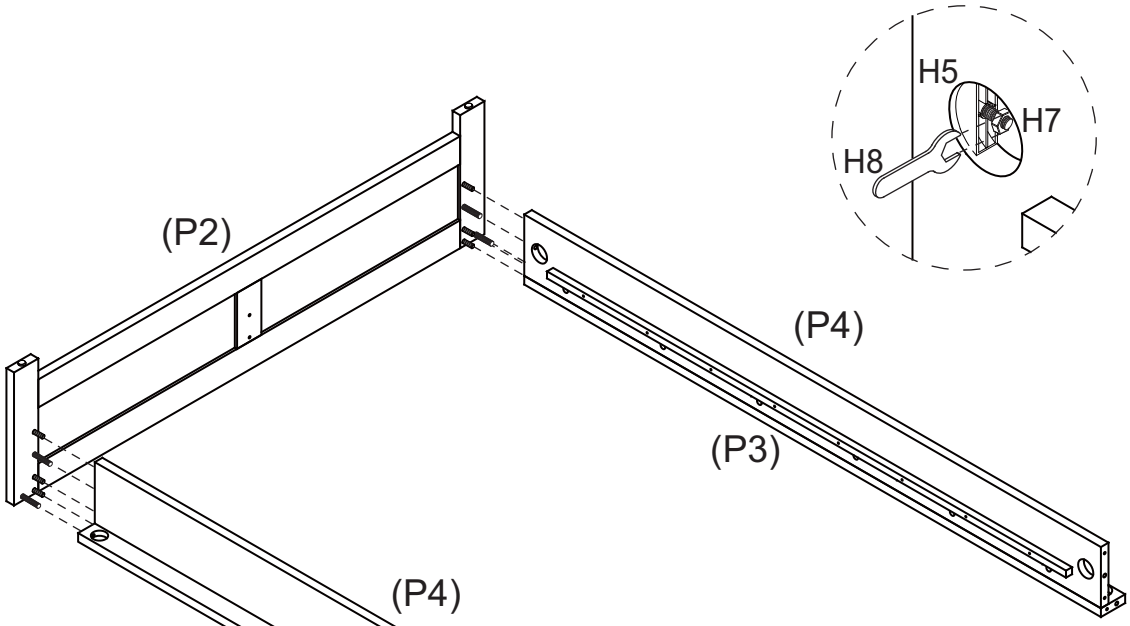

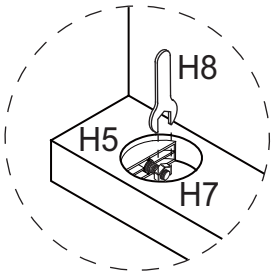

Attach Bedfoot (P2) to Side Covers (P3) and Side Rails (P4)
with 4 x Half Round Nuts (H5) and 4 x Hexagonal Nuts (H7) using Spanner (H8).

Step 5

You will need	
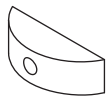	
4 x Half Round Nuts (H5)	4 x Hexagonal Nuts (H7)
1 x Spanner (H8)	

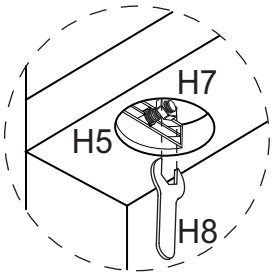

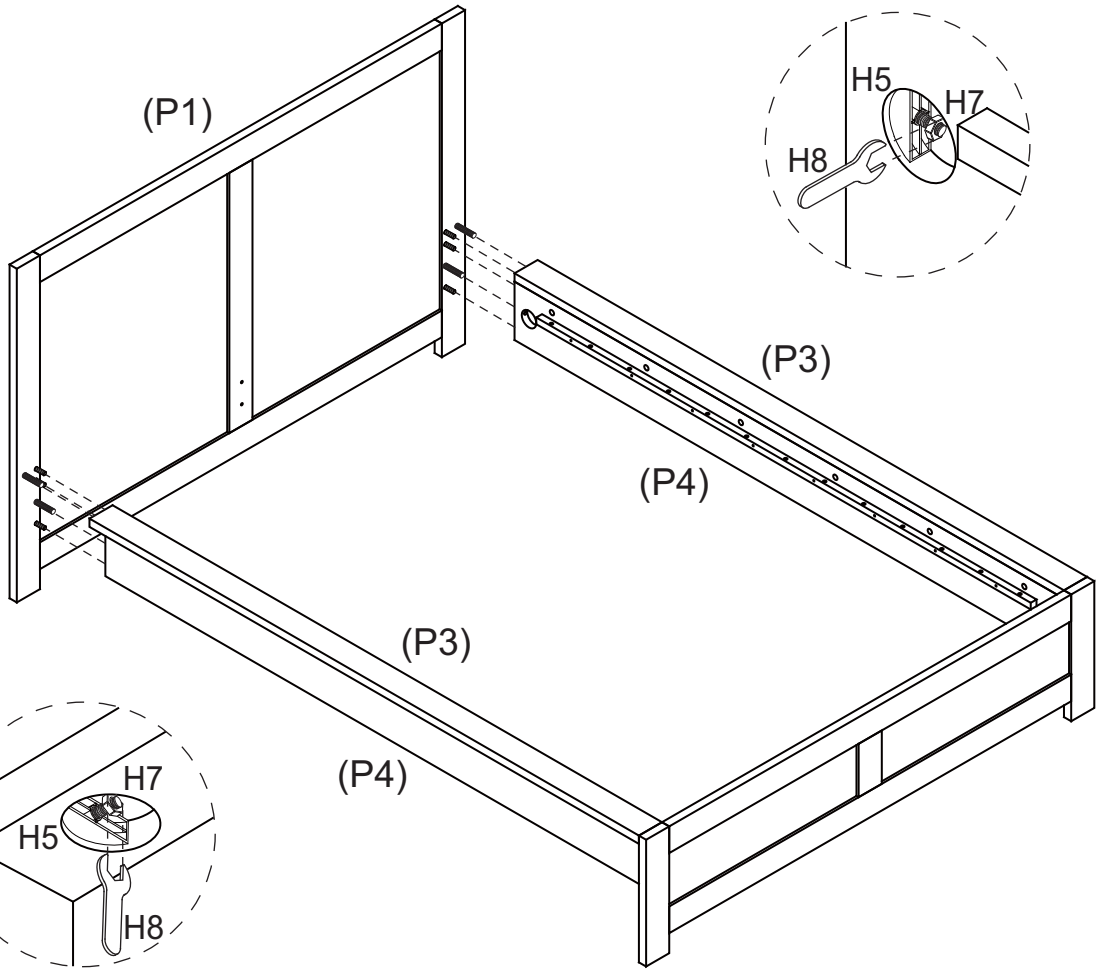

Attach Bedhead (P1) to Side Covers (P3) and Side Rails (P4) with 4 x Half Round Nuts (H5) and 4 x Hexagonal Nuts (H7) using Spanner (H8).

Step 6

You will need	
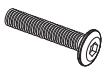	
2 x Long Bolts (H10)	1 x Allen Key (H11)

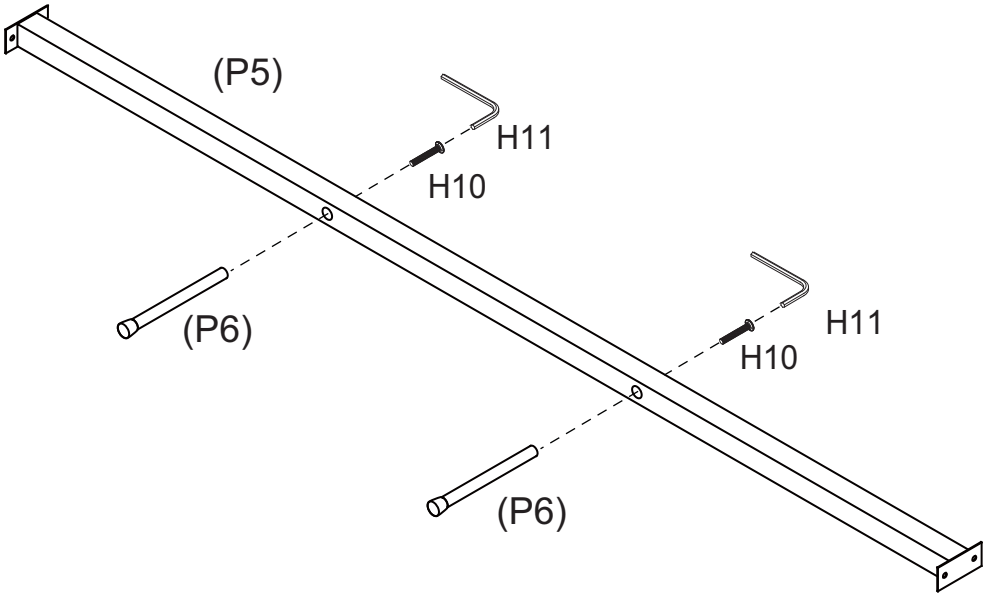

Attach 2 x Support Legs (P6) to Centre Rail (P5) with 2 x Long Bolts (H10) using Allen Key (H11).

Step 7

You will need	
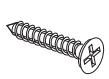	
4 x Screws (H2)	Phillips head screwdriver

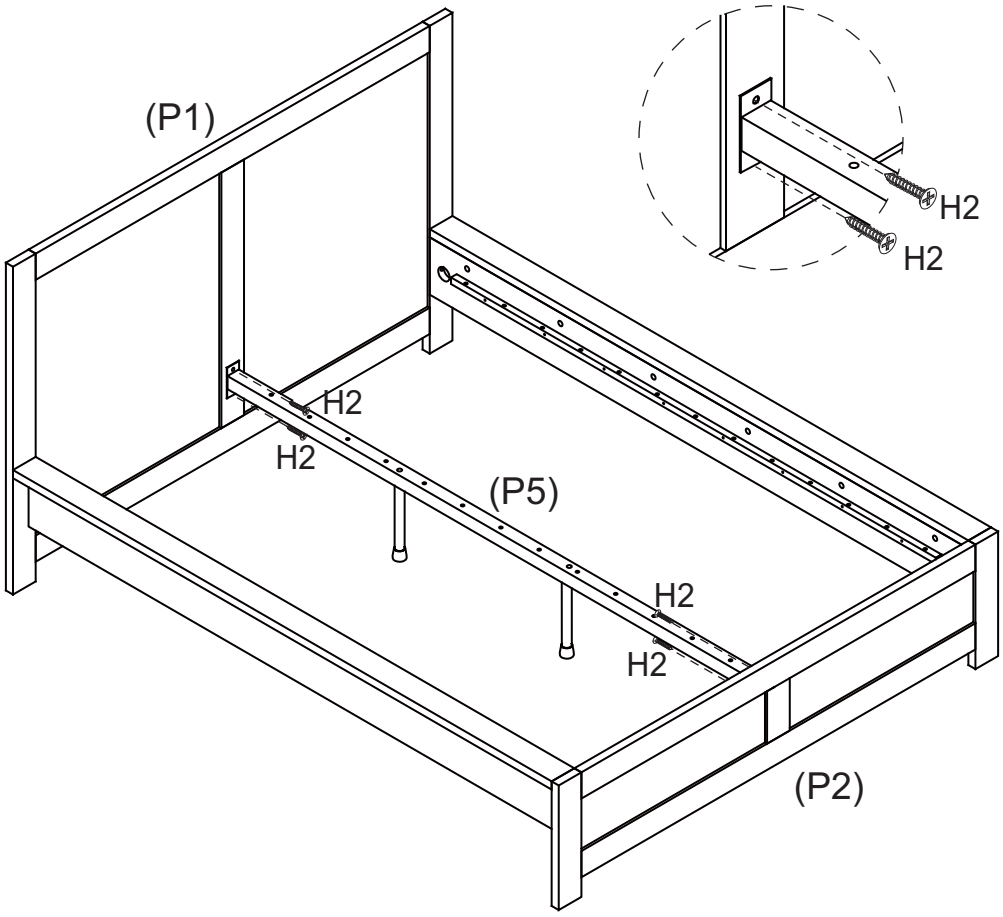

Attach Centre Rail (P5) to Bedhead (P1) and Bedfoot (P2) as shown.
Then screw Centre Rail (P5) with 4 x Screws (H2).

Step 8

You will need	
26 x End Connectors	13 x Centre Connectors
26 x Fantastic Furniture ComfortSlats™ Double	

HOW TO FIT YOUR COMFORT SLATS

1

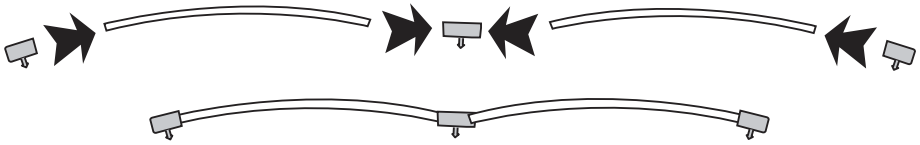

Push 2 End Connectors, 2 Fantastic Furniture ComfortSlats™ Double and a Centre Connector together.

2

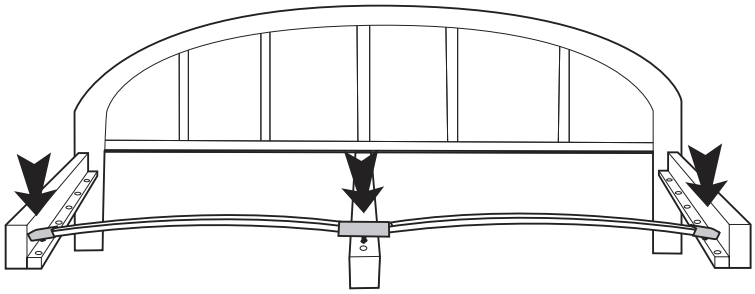

Insert the full slat into the side rail and centre rail one by one.

3

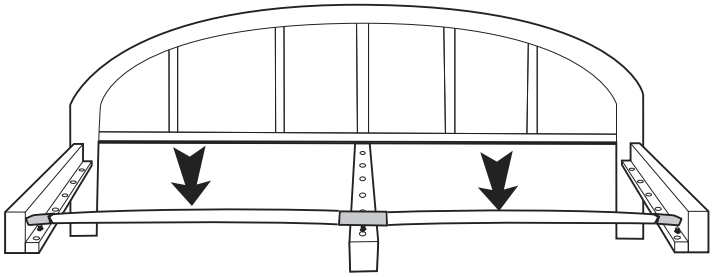

Sometimes it makes it easier to line up the hole
if you press down in the middle of the slat to flatten it out.

4

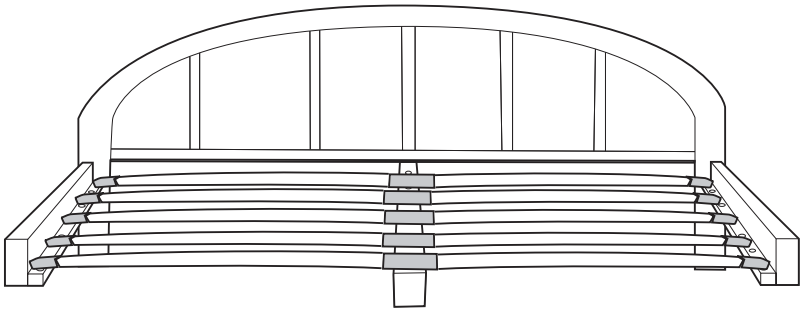

Repeat for every bed slat until finished.

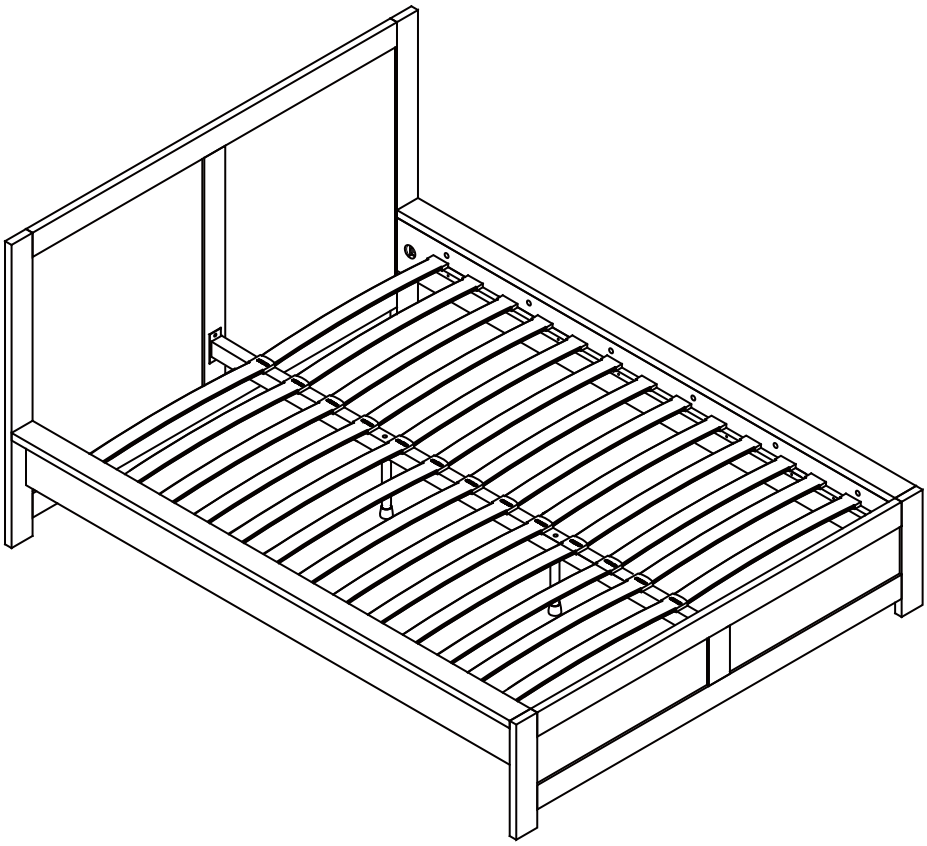

Job Complete!

In the interest of our environment please dispose of all packaging thoughtfully.