Assembly Instructions

zoe

Table D4

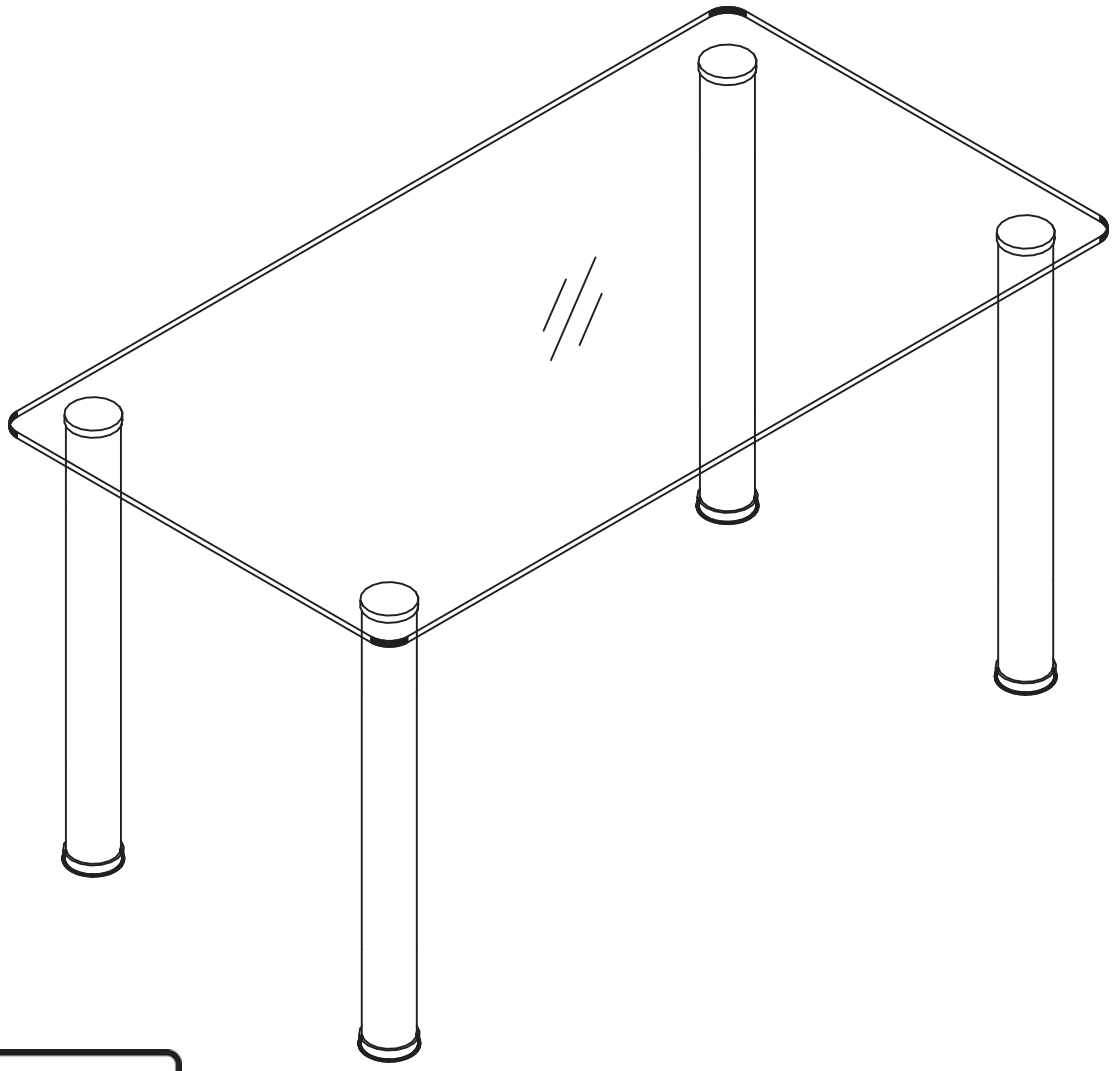

FANTASTIC FURNITURE

Ver1.3

WARNING

FAILURE TO FOLLOW THESE BASIC STEPS CAN LEAD TO DAMAGE THAT IS NOT COVERED BY YOUR WARRANTY

1

Read Instructions carefully.
Check no parts are missing.

2

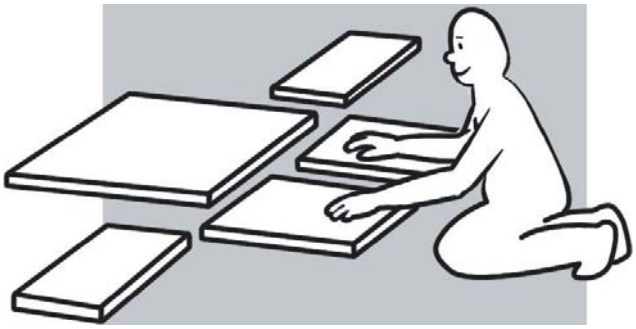

Lay out all of the components on a soft surface as if you were preparing to do a jigsaw puzzle.

3

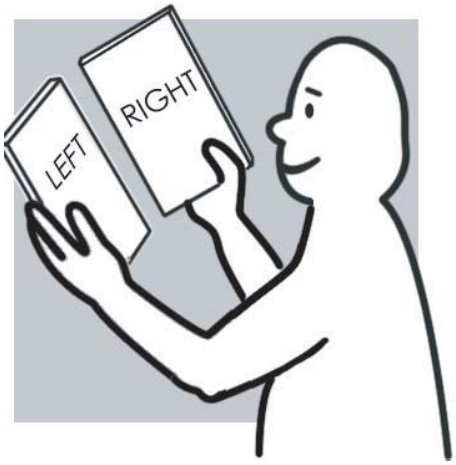

Carefully identify each component, especially those that are similar. The most common mistake is getting things back to front.

4

Separate and identify each component from the hardware pack and rest each one in its proper location before fastening.

5

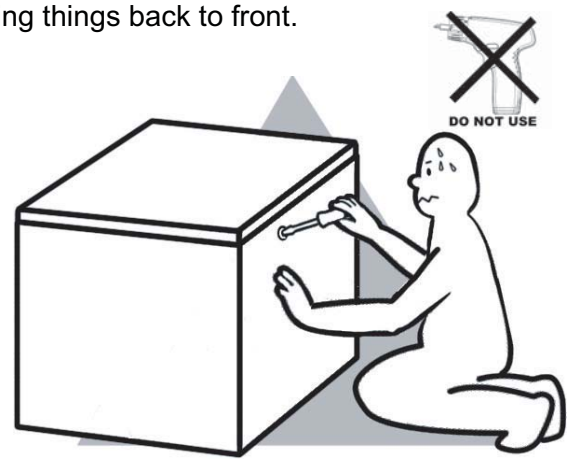

DO NOT fully tighten screws（leave slightly loose).When the item is fully assembled tighten the screws - but do not over tighten.

6

If glue is required DO NOT set until you are certain that the parts belong together.

What you Need

To Assemble the Body

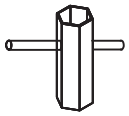

Socket Wrench
(provided)

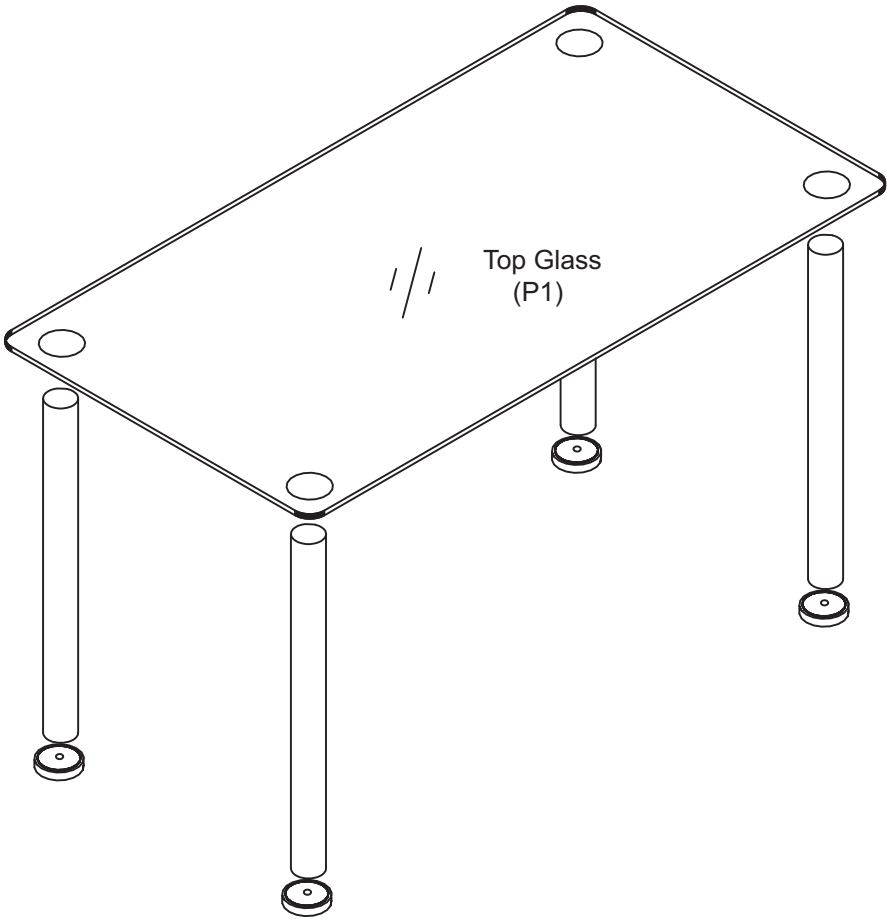

4x Threaded Rod
(H1)

4x Legs
(H2)

4x Washers
(H3)

4x Spring Washers
(H4)

4x Nuts
(H5)

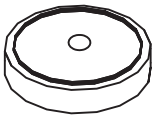

4x Foot
(H6)

Please make sure you have all these parts before you start.

Step 1

You will need:	
4x Threaded Rod (H1)	
1x Top Glass (P1)	

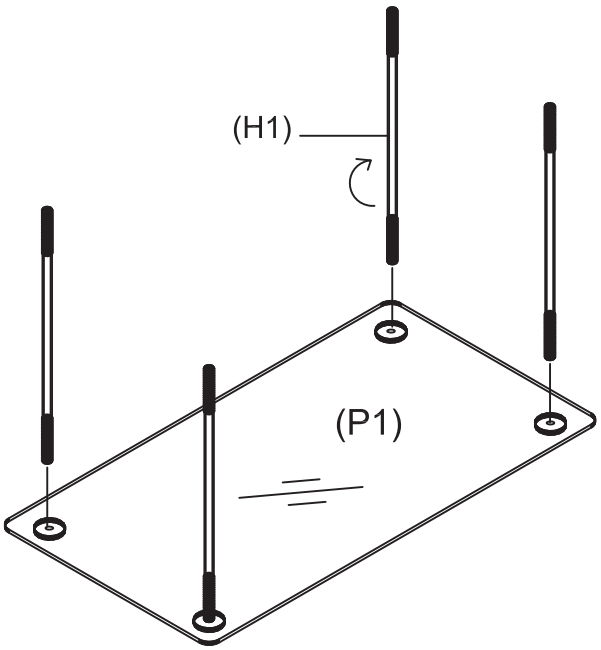

Insert each Threaded Rod(H1) into disc on
Top Glass (P1) surface and fasten tightly by hand.

Step 2

You will need:	
4x Legs (H2)	
4x Washers (H3)	
4x spring washers (H4)	
4x Nuts (H5)	
4x Feet (H6)	

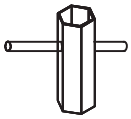

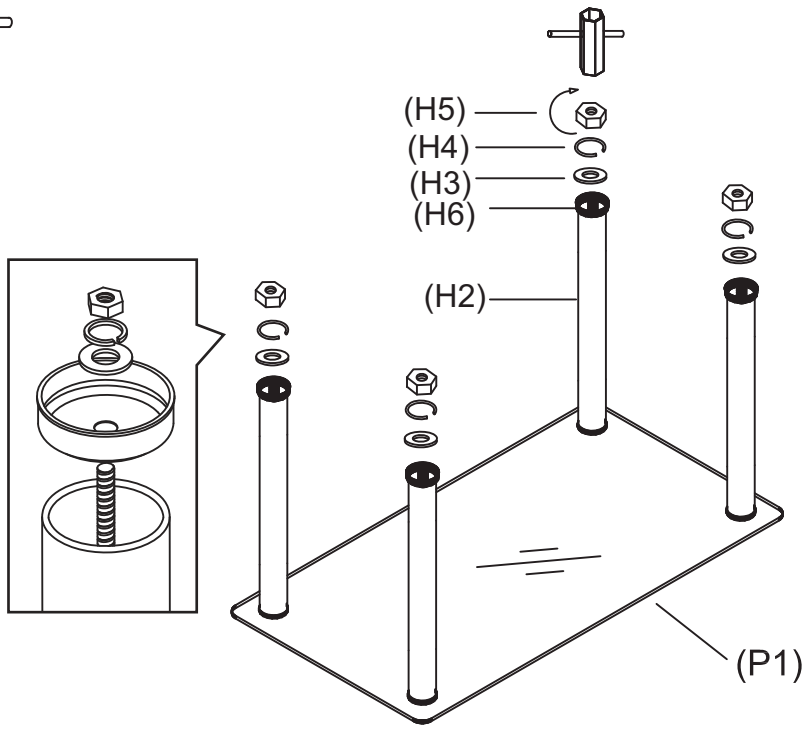

Use Washers (H3),Spring Washers(H4) and Nuts(H5)
to attach Legs(H2) and Feet(H6) to Top Glass(P1).
Take care to align feet in the center of leg.
Tighten with socket wrench provided.

Step 3

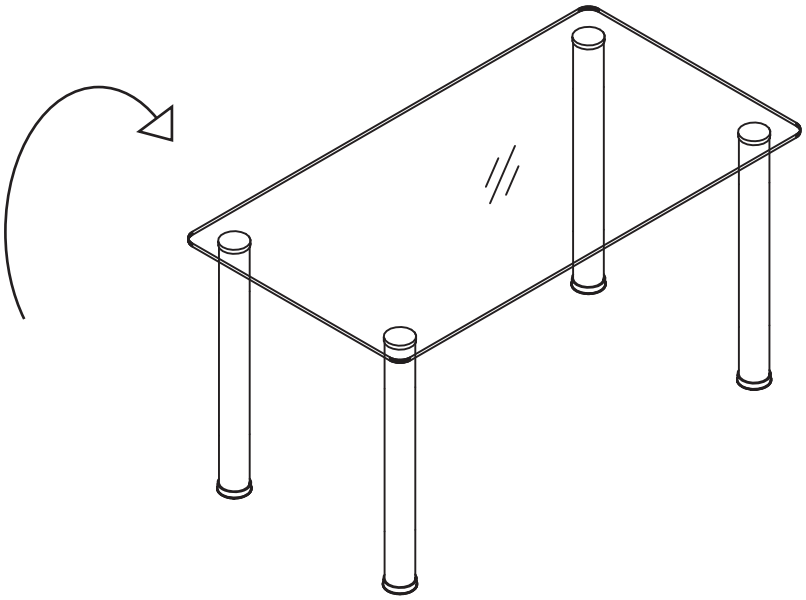

2 PEOPLE REQUIRED TO CAREFULLY TURN OVER THE TABLE.
ALWAYS PICK UP THE TABLE BY THE TOP WHEN MOVING OR TURNING OVER.
DO NOT DRAG OR TURN OVER THE TABLE BY THE LEGS.

The job is now complete!

In the interest of our environment
Please dispose of all packaging thoughtfully.